PARTS LIST

MODEL6200

PARTSLIST

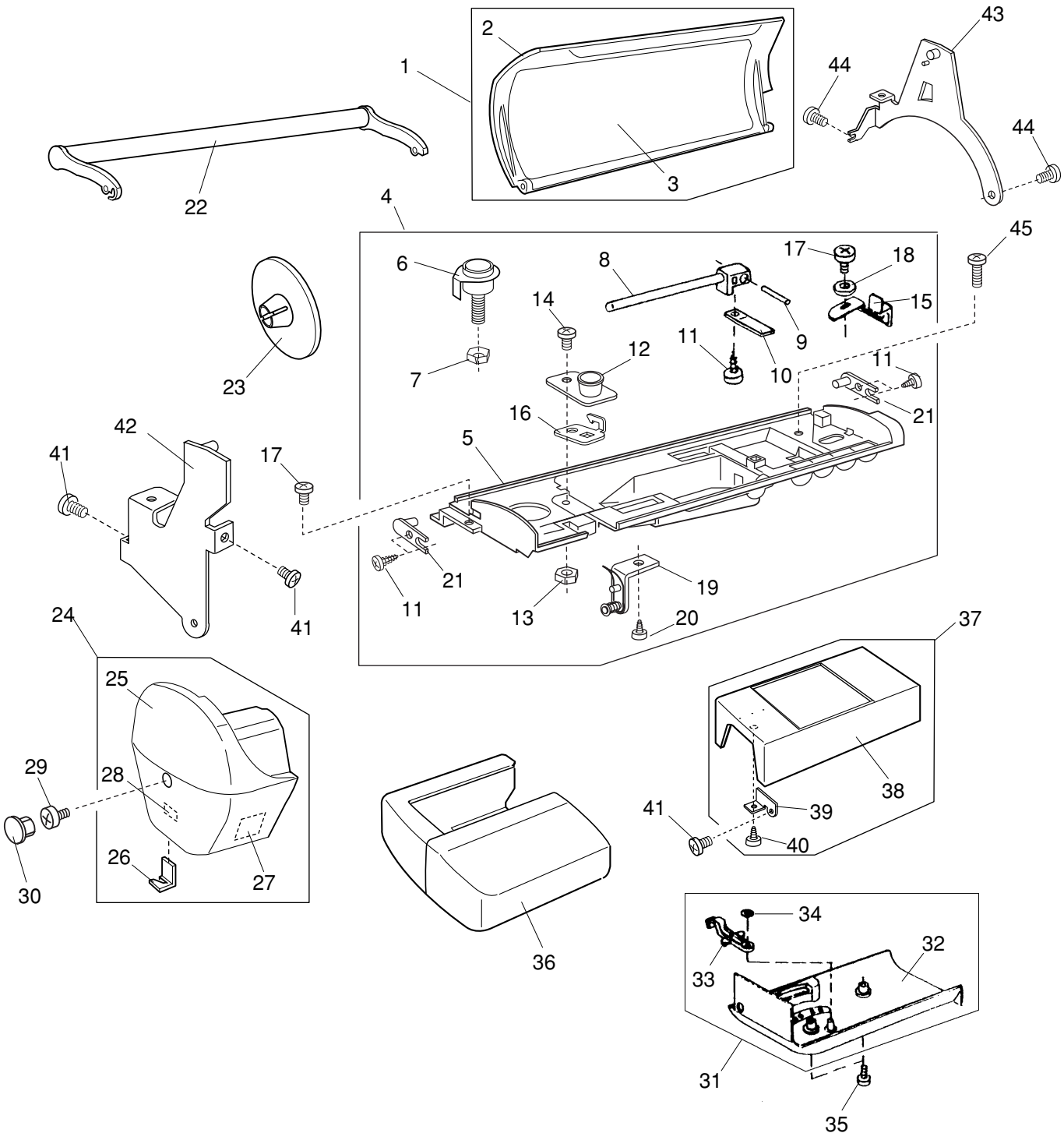
1
2
3
4
5
6
7
8
9
10
11
12
13
14
15
16
17
18
19
20
21
22
23
24
25
26
27
28
29
30
31
32
33
34
35
36
37
38
39
40
41
42
43
44
45

PARTSLIST

NO.	PART #	DESCRIPTION
1	849624104	Top cover (unit)
2	849603107	Top cover
3	849070006	Reference chart (1)
4	849604108	Top cover compartment (unit)
5	849017005	Top cover compartment
6	730501022	Thread guide (unit)
7	000160102	Adjustable locknut 4
8	822016609	Spool pin
9	822017002	Spool pin shaft
10	822018003	Spool pin spring
11	000107318	Set screw 3 X 8B
12	753502002	Top cover thread guide (unit)
13	000062701	Hexagonal nut
14	693093006	Flat screw
15	503144001	Bobbin winder stopper
16	840138006	Top cover thread guide
17	000078342	Setscrew 3 X 6
18	000070126	Plain washer 3
19	849611005	Thread guide plate unit
20	000161701	Setscrew 2.3 X 5B
21	506034006	Top cover hinge
22	849020001	Carrying handle
23	822020503	Spool holder (Large)
24	849605006	Face plate (unit)
25	849023004	Face plate
26	840602006	Thread cutter (unit)
27	827099003	Reflector sticker
28	100411207	Lamp sticker
29	000101817	Setscrew 4 X 6
30	653006101	Cap
31	827602108	Bed cover (unit)
32	827004104	Bed cover
33	753005000	Drop feed lever
34	000013903	Snap ring CS-5
35	000101703	Setscrew 4 X 12
36	849503003	Extension table (unit)
37	659601100	Free arm cover (unit)
38	659001104	Free arm cover
39	756004008	Free arm cover set plate
40	000120203	Setscrew 3 X 8B
41	000101404	Setscrew 4 X 6
42	849021002	Handle bracket (front)
43	849022003	Handle bracket (rear)
44	000081005	Setscrew 4 X 8
45	000080901	Setsxrew 4 X 25

PARTSLIST

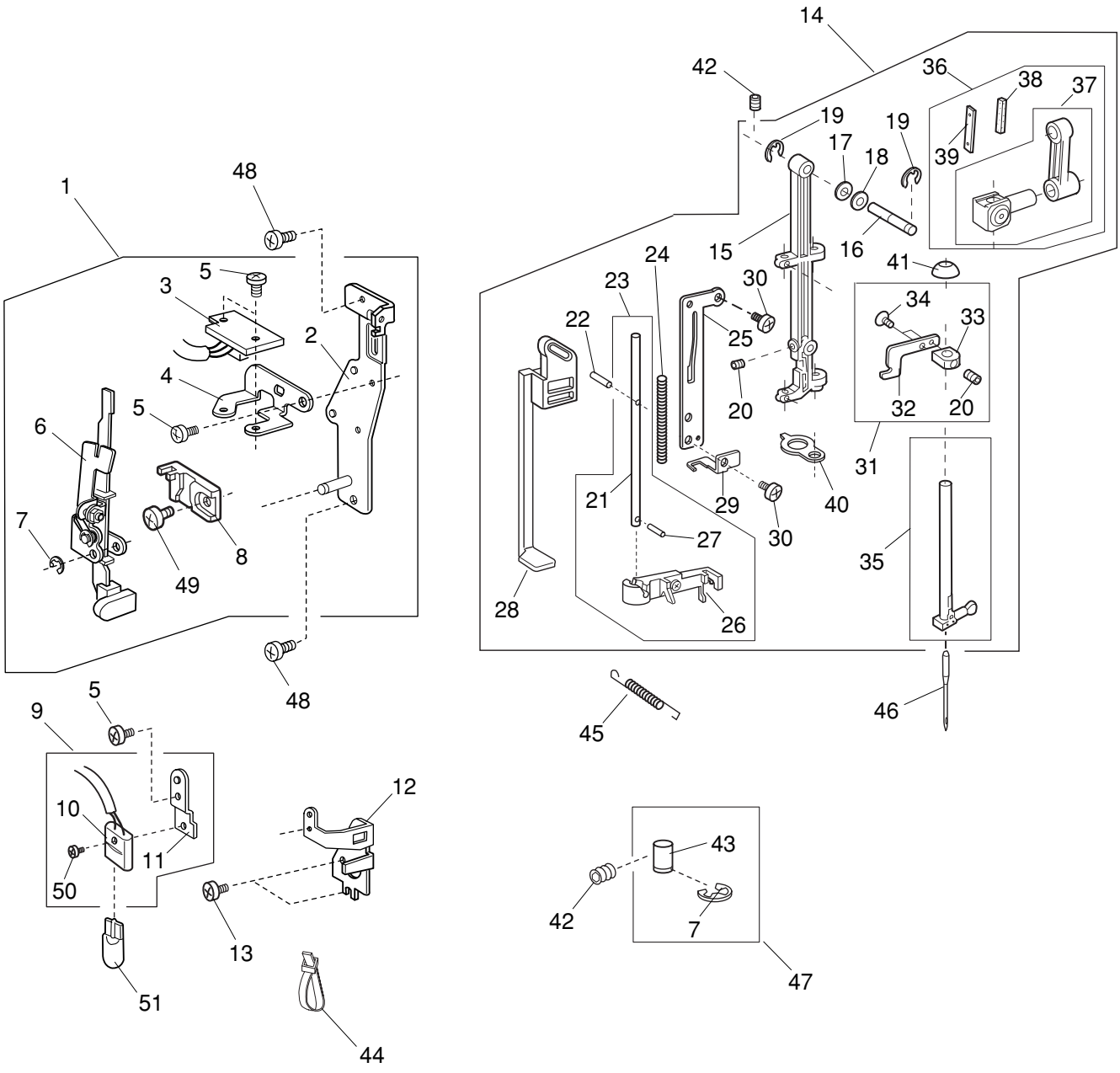
1
48
5
3
2
4
5
6
7
8
49
48
14
42
36
38
37
19
19
17
18
39
15
16
41
24
23
30
22
25
34
33
20
32
20
31
21
29
30
40
27
35
28
26
45
46
9
5
10
11
12
50
13
51
44
43
42
7
47

PARTSLIST

NO.	PART #	DESCRIPTION
1	843620102	Front bracket unit
2	840108007	Front bracket
3	843502107	Circuit board E-1 unit
4	843009006	Sensor bracket
5	000101105	Setscrew 3 x 4
6	843625107	BH lever unit
7	000002105	Snap ring E-3
8	830057010	BH lever guide
9	843616105	Lamp socket unit
10	843508206	Lamp socket unit
11	843039005	Lamp socket bracket (2)
12	843038004	Lamp socket bracket (1)
13	000101507	Setscrew 3.5 x 5
14	840647106	Needle bar supporter unit
15	827026010	Needle bar supporter
16	840137005	Needle bar supporter pin
17	673022002	Wave washer
18	000070609	Plain washer 6
19	000002507	Snap ring E-4
20	000111902	Hexagonal socket screw 3 x 4
21	840036003	Threader shaft
22	000125105	Pin
23	840646002	Threader shaft unit
24	840035002	Threader spring
25	840033000	Threader guide plate
26	755643002	Threader plate unit
27	000003508	Pin 2 x 8
28	840034001	Threader lever
29	840037004	Threader lever supporter
30	000078319	Setscrew 3 x 6
31	734625003	Threader positioning plate unit
32	734101008	Threader positioning plate
33	734102009	Threader positioning holder
34	000097602	Flat screw 2 x 4
35	653503103	Needle bar unit
36	653612003	Needle bar connection stud unit
37	653504001	Needle bar connection stud unit
38	650040005	Felt
39	650041006	Felt holder spring
40	829027006	Supporter guide
41	827098002	Curved washer
42	000111201	Hexagonal socket screw 4 x 4
43	827083004	Supporter guide pin
44	000053008	Cord binder
45	827092006	Supporter spring
46	102408089	Needle HA1-14
47	842625001	Supporter guide pin unit
48	000101404	Setscrew 4 x 6
49	000103808	Setscrew 3 x 5
50	000102900	Setscrew 2 x 8
51	000026002	Wedge base lamp 12 V, 5 W

PARTSLIST

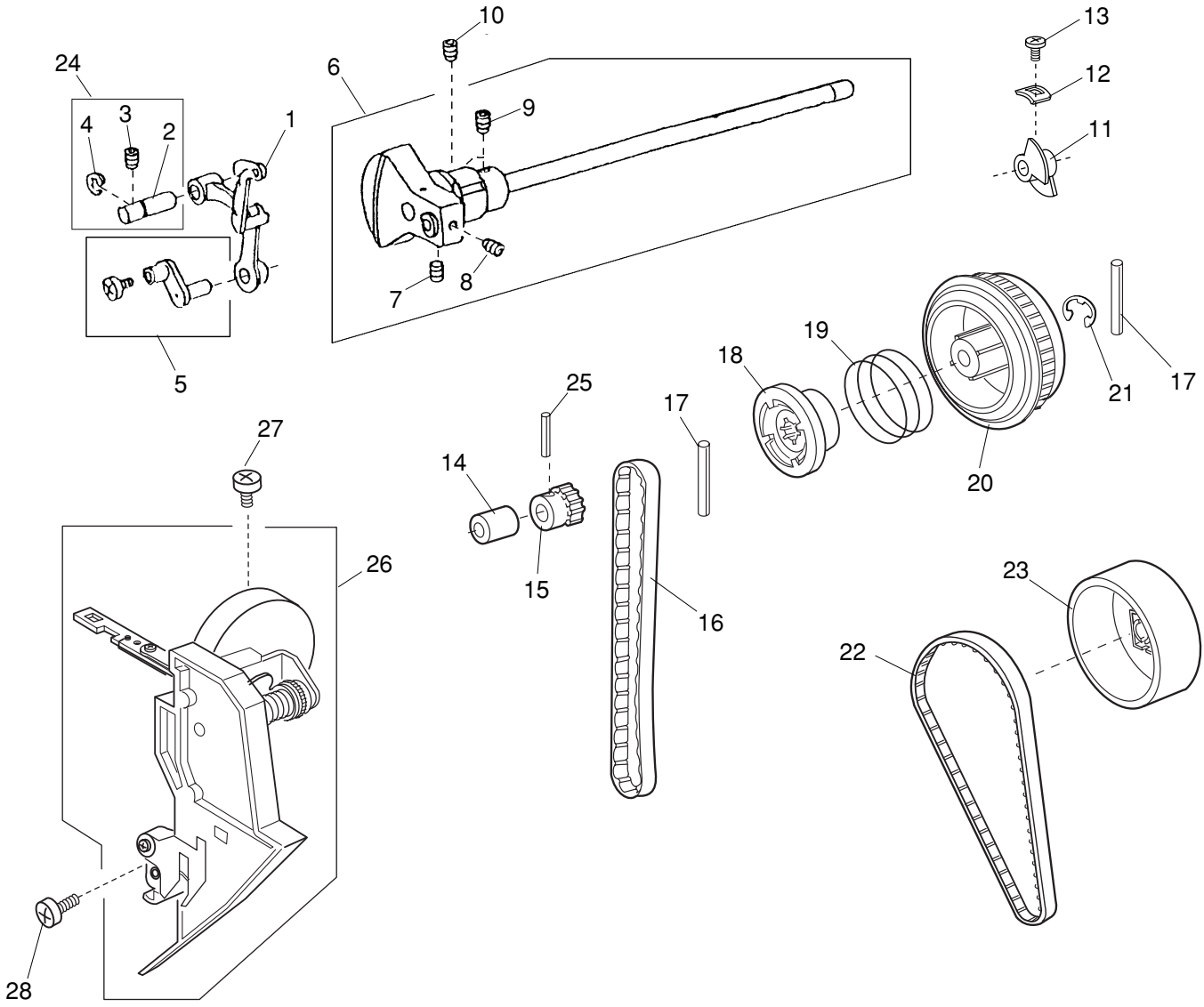

PARTSLIST

NO.	PART #	DESCRIPTION
1	820511108	Thread take-up lever unit
2	650062003	Thread take-up lever pin
3	000111201	Hexagonal socket screw 4 x 4
4	000001702	Snap ring E-6
5	652512009	Needle bar clank pin unit
6	849623103	Upper shaft unit
7	000111706	Hexagonal socket screw 5 x 8
8	000110901	Hexagonal socket screw 5 x 4
9	000111304	Hexagonal socket screw 5 x 5
10	000111304	Hexagonal socket screw 5 x 5
11	830095010	Upper shaft shield plate
12	820102009	Washer
13	000081005	Setscrew 4 x 8
14	673062004	Upper shaft bushing (rear)
15	756017004	Upper shaft timing gear
16	650071005	Timing belt
17	000024206	Spring pin 3 x 30
18	502064003	Clutch ring
19	502065004	Clutch spring
20	844050016	Belt wheel
21	000030205	Snap ring E-8
22	653139012	Timing belt
23	849049006	Hand wheel
24	650626001	Take-up lever supporter shaft unit
25	000020501	Spring pin 3 x 22
26	849509009	Tension assembly
27	000101404	Setscrew 4 X 6
28	000101703	Setscrew 4 X 12

PARTSLIST

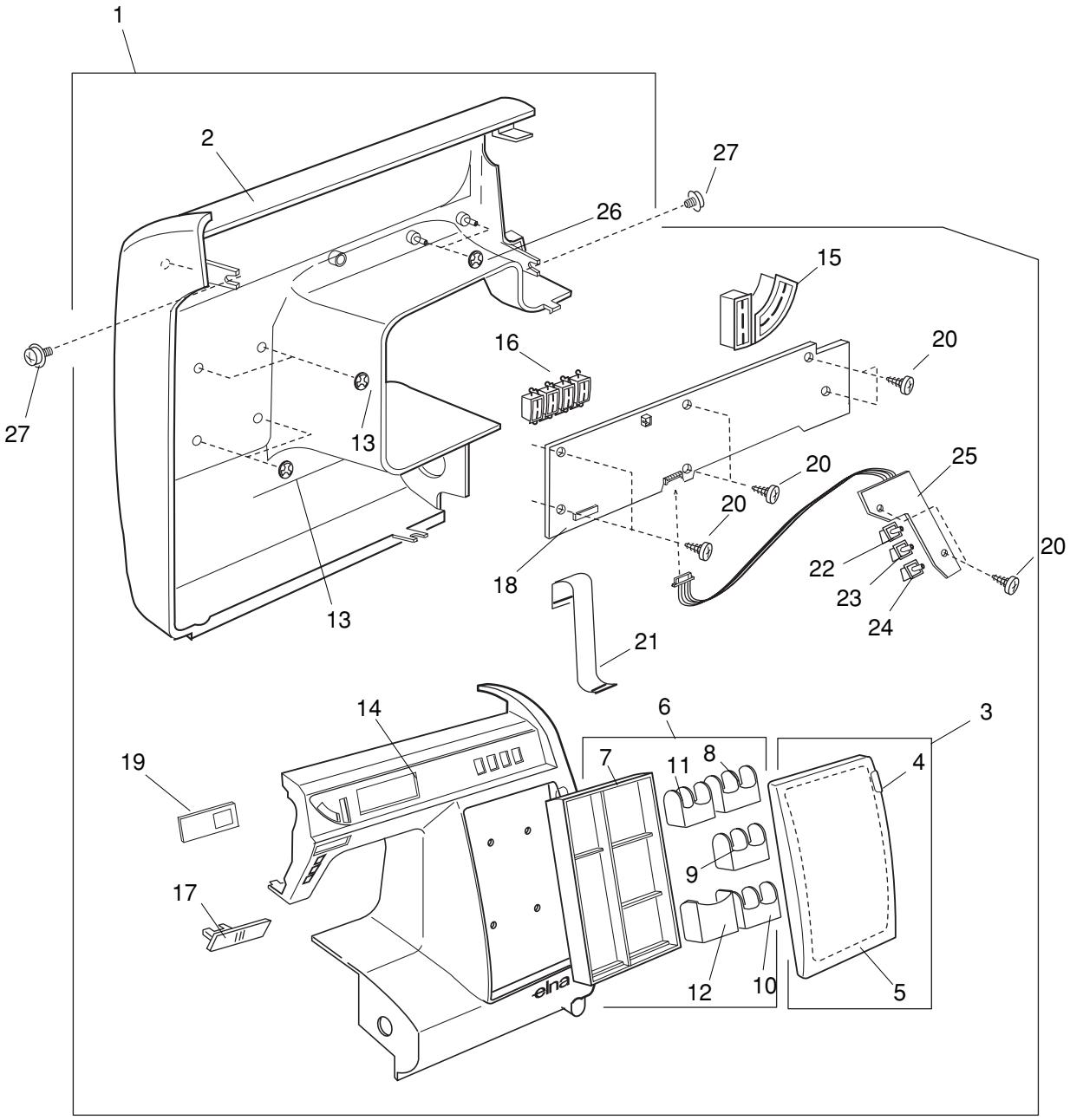
1
2
27
26
15
16
20
27
13
20
25
20
18
22
20
23
24
13
21
14
6
3
19
7
11
8
4
9
17
12
10
5
elna

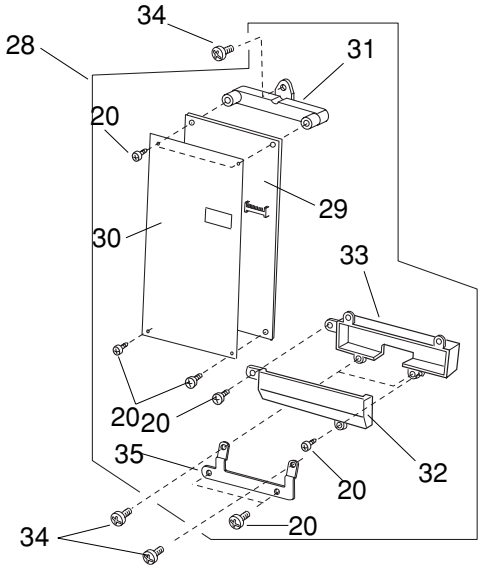
34
28
31
20
29
30
33
20
20
32
35
20
34
20

PARTSLIST

NO.	PART #	DESCRIPTION
1	849622009	Front cover (unit)
2	849032202	Front cover
3	849619106	Compartment lid (unit)
4	849033111	Compartment lid
5	849071007	Reference chart (2)
6	849602106	Storage compartment (unit)
7	849034008	Storage compartment
8	849058134	Storage compartment (1)
9	849058145	Storage compartment (1)
10	849058156	Storage compartment (1)
11	849059113	Storage compartment (2)
12	849060117	Storage compartment (3)
13	000014007	Snap ring CS-4
14	849066102	Keyboard panel
15	849037207	Keyboard button (1)
16	849068104	Keyboard button (2)
17	849040007	Speed control lever
18	849506006	Print board K (unit)
19	849067103	LCD window
20	000120203	Setscrew 3 X 8
21	844512000	Flat cable
22	849042102	Button
23	849042205	Button
24	849042308	Button
25	849507007	Circuit board F (unit)
26	000014306	Snap ring CS-3
27	000115205	Setscrew 4 X 6
28	849610104	Circuit board A (unit)
29	849508008	Circuit board A (unit)
30	847034002	Insulation paper
31	848014009	A-board barcket (upper)
32	846184005	A-board case
33	846185006	A-board case lid
34	000081005	Setscrew 4 X 8

PARTSLIST

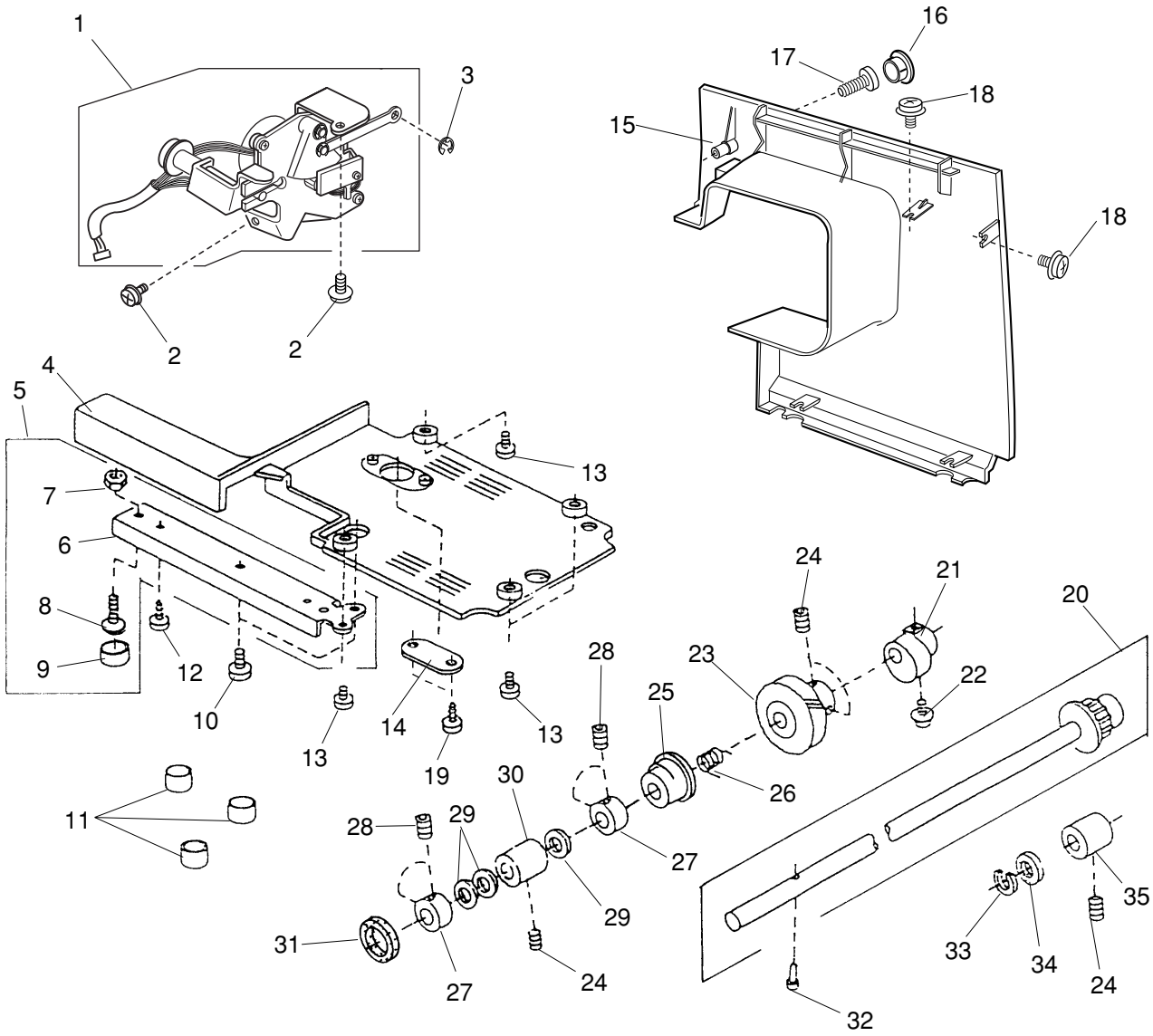
1
2
2
3
4
5
6
7
8
9
10
11
12
13
13
13
14
15
16
17
18
18
19
20
21
22
23
24
24
25
26
27
27
28
28
29
29
30
31
32
33
34
35
24

PARTSLIST

NO.	PART #	DESCRIPTION
1	844602008	Feed motor unit
2	000115205	TP screw 4 x 6
3	000002105	Snap ring E-3
4	827003000	Base
5	827601107	Leg unit
6	827002102	Leg
7	000061412	Hexagonal nut
8	000097901	Flat screw 5 x 18
9	735002001	Rubber foot
10	000066808	Setscrew 6 x 14
11	647009002	Rubber foot
12	000161206	Setscrew 3 x 10 B
13	000103509	Set screw 4 x 10
14	824058001	Base lid
15	849001109	Rear cover
16	653006101	Cap
17	000104108	Setscrew 4 x 20
18	000115205	TP screw 4 x 6
19	000107318	Setscrew 3 x 8B
20	751612206	Lower shaft unit
21	751480000	Feed cam
22	000115009	Setscrew 3 x 14
23	650076000	Lower shaft gear
24	000111304	Hexagonal socket screw 5 x 5
25	753183025	Feed lifting cam
26	686035008	Feed lifting cam spring
27	820166001	Ring
28	000111201	Hexagonal socket screw 4 x 4
29	000038502	Washer
30	650078002	Lower shaft bushing (front)
31	735143005	Felt
32	820161006	Feed lifting pin
33	822112008	Felt holder (1)
34	822070003	Felt (1)
35	650079003	Lower shaft bushing (rear)

PARTSLIST

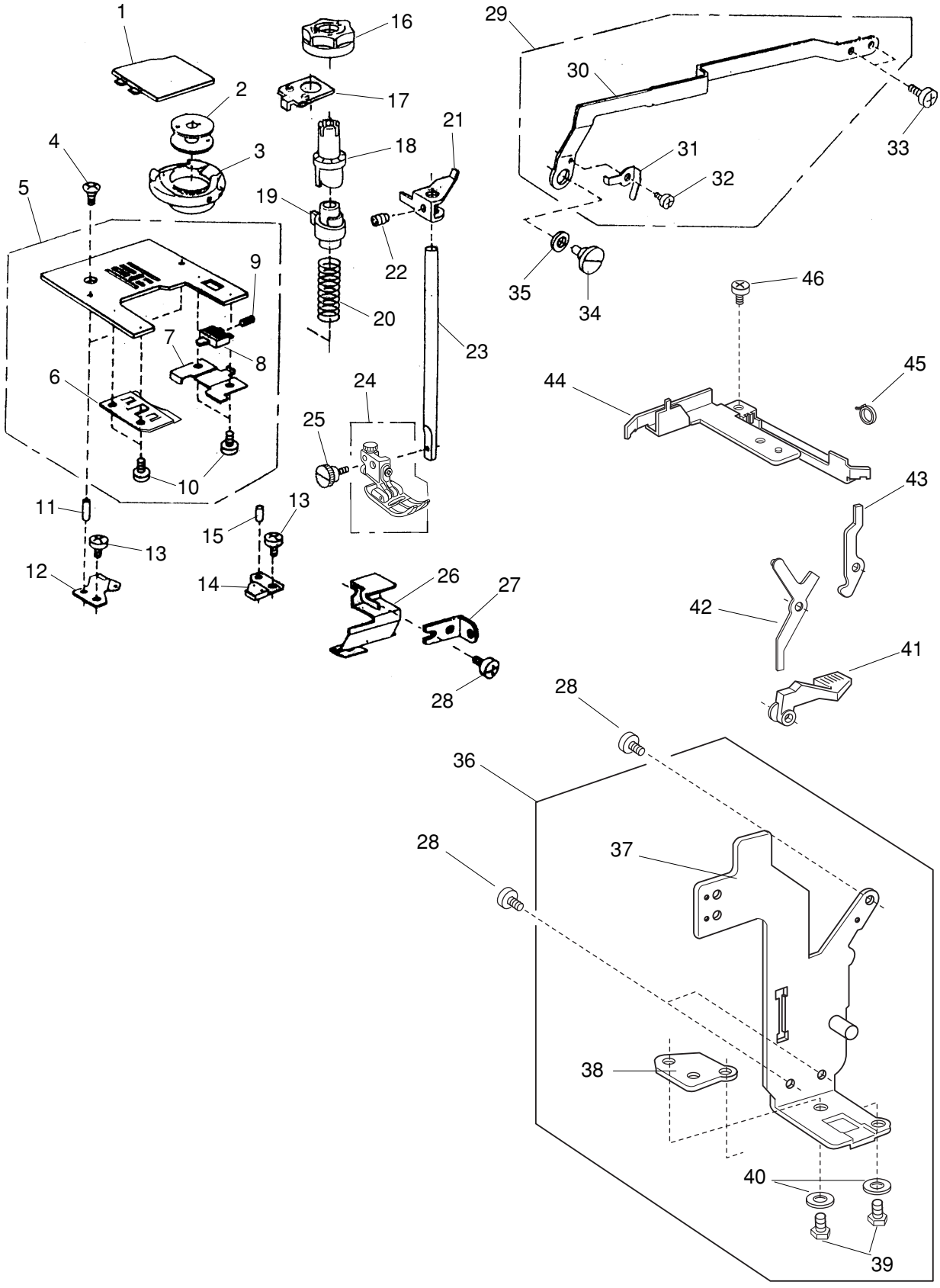
1
2
3
4
5
6
7
8
9
10
11
12
13
14
15
16
17
18
19
20
21
22
23
24
25
26
27
28
29
30
31
32
33
34
35
36
37
38
39
40
41
42
43
44
45
46

PARTSLIST

NO.	PART #	DESCRIPTION
1	750036012	Hook cover plate
2	102261000	Bobbin
3	627569106	Bobbin holder (unit)
4	681009101	Flat screw
5	756604303	Needle plate (unit)
6	832235010	Hook cover holder (left)
7	825015010	Hook cover holder (right)
8	825016000	Hook cover release button
9	825017001	Hook cover holder spring
10	820374004	Setscrew 2 X 2.3
11	000122504	Pin
12	827011001	Stopper
13	810220003	Setscrew
14	627567001	Hook stopper (unit)
15	000122700	Pin
16	822065005	Foot pressure dial
17	840120005	Foot pressure adjusting cam support
18	686027007	Foot pressure adjusting cam (1)
19	686028008	Foot pressure adjusting cam (2)
20	840129004	Presser bar spring
21	735028003	Presser baar barcket
22	000111500	Hexagonal socket screw 4 X 8
23	827021004	Presser bar
24	829515006	Presser foot (unit)
25	753199002	Thumbscrew
26	827036002	Arm thread guide
27	827037003	Front cover bracket
28	000081005	Setscrew 4 X 8
29	827622012	Zigzag rod (unit)
30	827055018	Zigzag rod
31	827088009	Zigzag rod spring
32	820373003	Setscrew 2 X 3
33	000078319	Setscrew 3 X 6
34	678084007	Eccentric pin
35	653037008	Washer
36	849606007	Presser bar plate (unit)
37	848023001	Presser bar plate
38	827082003	Presser bar positioning plate
39	000066303	Hexagonal bolt 4 X 6
40	000070908	Plain washer 4
41	849052002	Presser bar bracket link
42	827022005	Tension release lever 1
43	827023006	Tension release lever 2
44	849028009	Cord guide
45	000053008	Cord binder
46	000101404	Setscrew 4 X 6

PARTSLIST

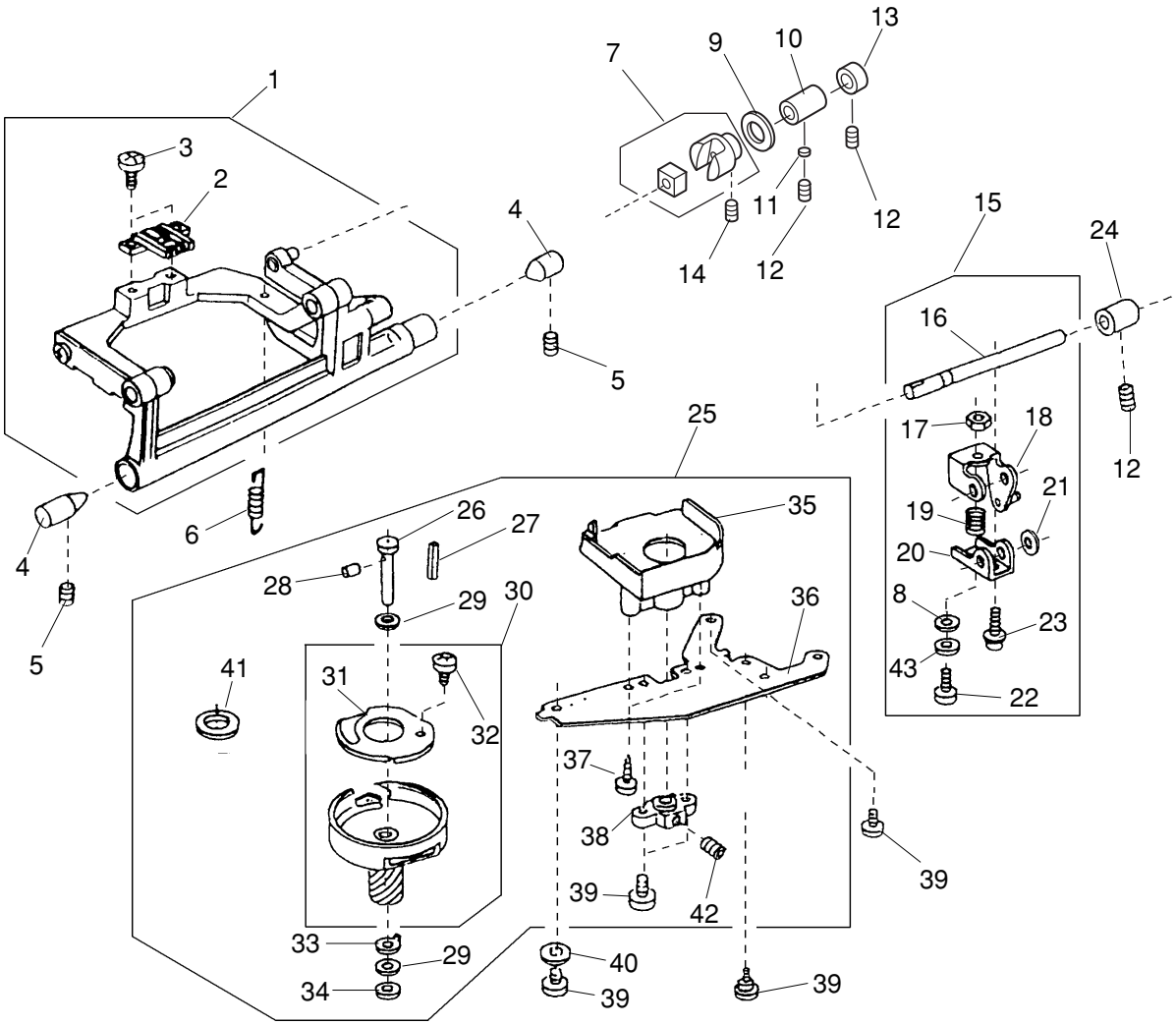
1
3
2
4
5
6
4
5
7
9
10
13
11
12
14
12
12
15
24
16
17
18
21
19
20
8
23
43
22
12
25
26
27
28
29
30
35
36
41
31
32
37
38
39
39
42
33
29
34
40
39
39

PARTSLIST

NO.	PART #	DESCRIPTION
1	827615300	Feed shaft unit
2	840005003	Feed dog
3	000104005	Setscrew 3.5 x 8
4	738055008	Straight center pin
5	000111304	Hexagonal socket screw 5 x 5
6	650085002	Feed bar spring
7	650612004	Feed regulator unit
8	000071013	Plain washer
9	821311009	Felt
10	625144002	Feed shaft bushing (front)
11	650175000	Cushion
12	000111201	Hexagonal socket screw 4 x 4
13	820387000	Ring
14	000111304	Hexagonal socket screw 5 x 5
15	840603007	Feed shaft unit
16	840006004	Feed shaft
17	000160102	Adjustable nut 4
18	825261002	Feed arm (2)
19	589040002	BH feed adjusting spring
20	827043105	Feed arm (1)
21	810207004	Spring washer
22	827086007	Feed arm screw
23	000115906	TP screw 3 x 12
24	650092002	Feed shaft bushing (rear)
25	827614033	Hook unit
26	820123006	Hook shaft
27	820124007	Oil wick (1)
28	820125008	Oil wick (2)
29	000038409	Washer
30	650623008	Hook race unit
31	627191000	Hook race bottom plate
32	820374004	Setscrew 2 x 2.3
33	627192001	Hook shaft washer
34	625102008	Plain washer
35	827040009	Hook race cover
36	823106002	Hook bracket
37	000107204	Setscrew 3 x 12B
38	650094004	Hook shaft base
39	000081005	Setscrew 4 x 8
40	000070506	Plain washer
41	627190010	Hook race magnet
42	000111304	Hexagonal socket screw 5 x 5
43	000036407	Washer

PARTSLIST

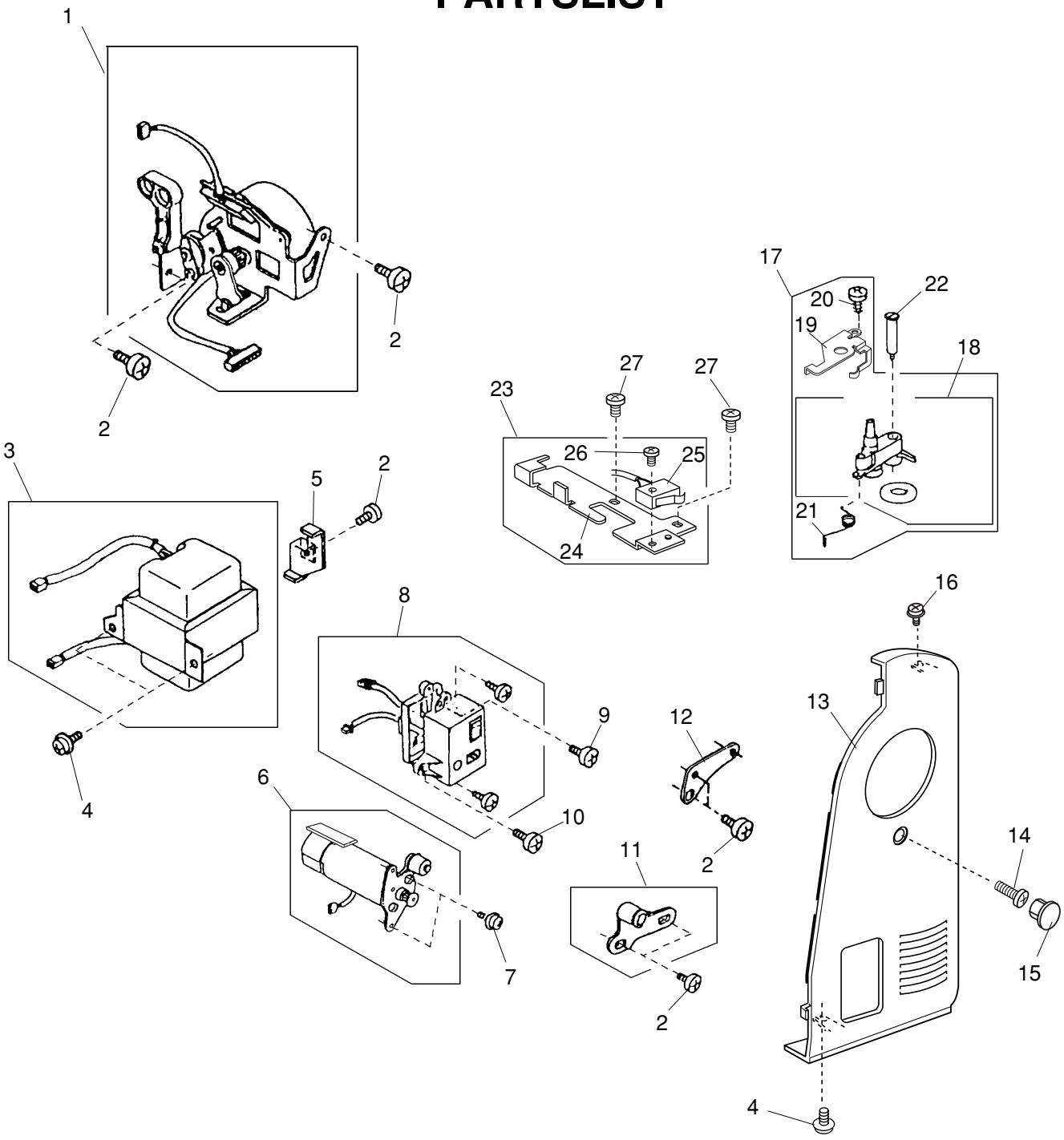
1
2
2
3
4
5
2
6
7
8
9
10
11
2
12
2
13
14
15
16
4
17
20
22
19
18
21
23
27
27
26
25
24

PARTSLIST

NO.	PART #	DESCRIPTION
1	843608207	Zigzag motor unit
2	000081005	Setscrew 4 x 6
3	843512203	Power transformer unit (120V)
4	000115205	TP screw 4 x 6
5	829020009	Transformer supporter
6	843615207	DC motor unit
7	000115700	TP screw 4 x 10
8	845503300	Machine socket
9	000103509	Setscrew 4 x 10
10	000101817	Setscrew 4 x 16
11	652611009	Idler unit
12	827085017	Belt cover bracket
13	849048005	Belt cover
14	000104108	Setscrew 4 x 20
15	653006101	Cap
16	000114709	TP screw 3 x 6
17	849616000	Bobbin winder unit
18	849505005	Bobbin winder unit
19	849046003	De-clutch arm
20	000078319	Setscrew 3 x 6
21	823119008	De-clutch arm spring
22	686063005	Hinge screw
23	849609000	Bobbin winder switch unit
24	849047004	Bobbin winder switch set plate
25	660518907	Micro switch unit
26	000102900	Setscrew 2 x 8
27	000101404	Setscrew 4 x 6

PARTSLIST

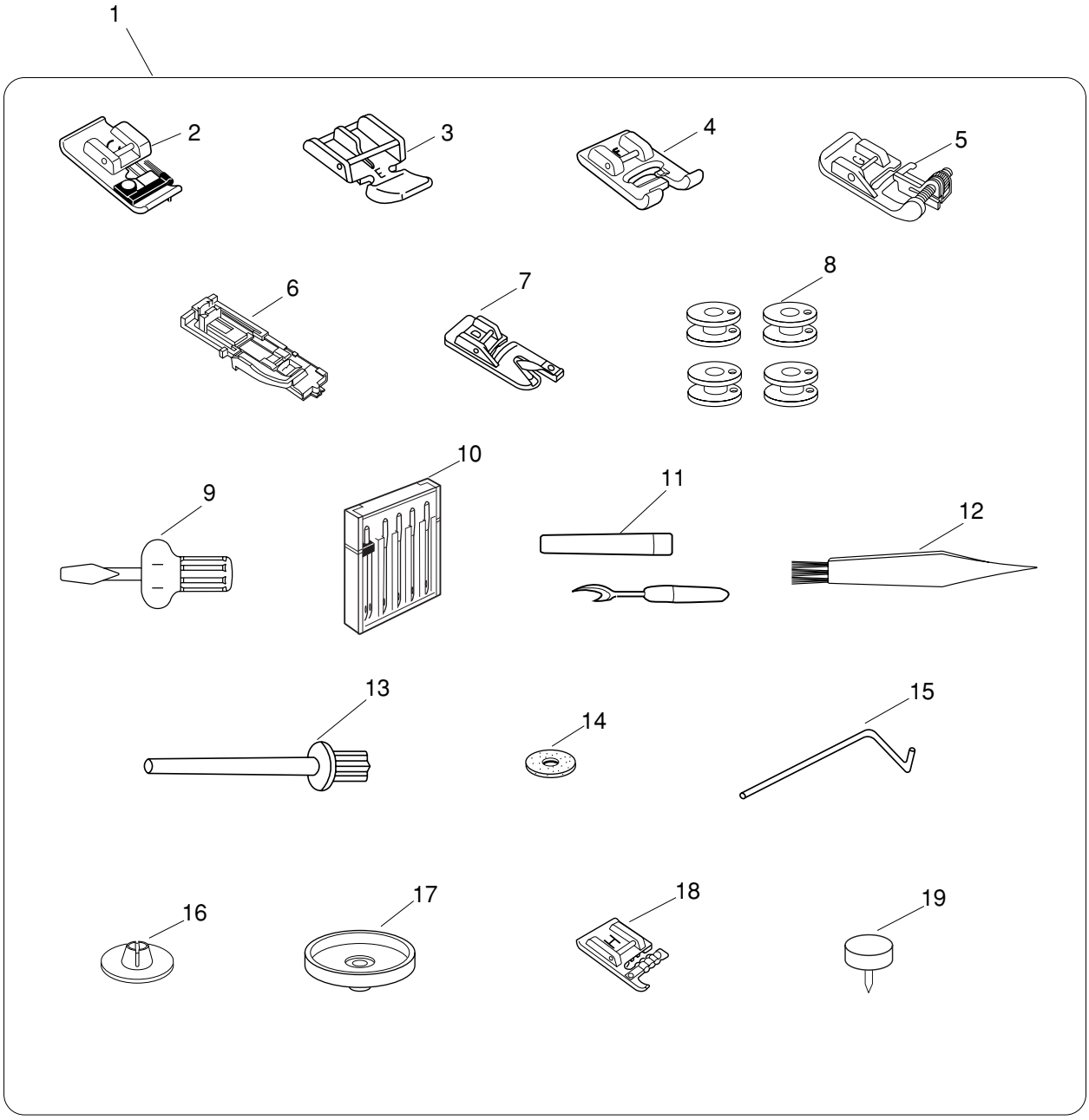

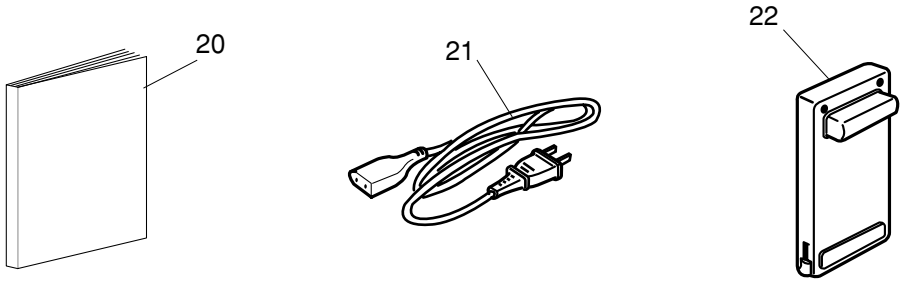

PARTSLIST

NO.	PART #	DESCRIPTION
1	849870015	Accessory unit
2	822801001	Overedge foot
3	829801002	Zipper foot
4	822804118	Satin stitch foot
5	820817015	Blind hem foot
6	753801004	Buttonhole foot
7	820809014	Rolled hem foot
8	102261000	Bobbin
9	820832005	Screwdriver
10	820827007	Needle set
11	647808009	Seam ripper
12	802424004	Lint brush
13	625031500	Additional spool pin
14	102403109	Felt
15	802422002	Quilt guide
16	822019509	Spool holder (small)
17	829803004	Spool stand
18	820819006	Cording foot
19	849801004	Circular pivot pin
20	849800047	Instruction book (English)
21	653524007	Power supply cord