elnita

220i
240i
250i

PIECES DE RECHANGE
ERSATZTEILE
SPARE PARTS
PIEZAS DE RECAMBIO

October, 1993

395900-40

Printed in Switzerland

I N D E X

1. Arm/bed, base plate, face plate, bottom cover, belt cover, handle, bobbin winder, extension table

2. Upper shaft, needle bar, presser bar, handwheel, light socket bracket, take-up lever

3. Zigzag mechanism, feed regulator device, tension, motor, controller

4. Lower shaft, feed rock shaft, shuttle

5. Accessories, instruction books

1

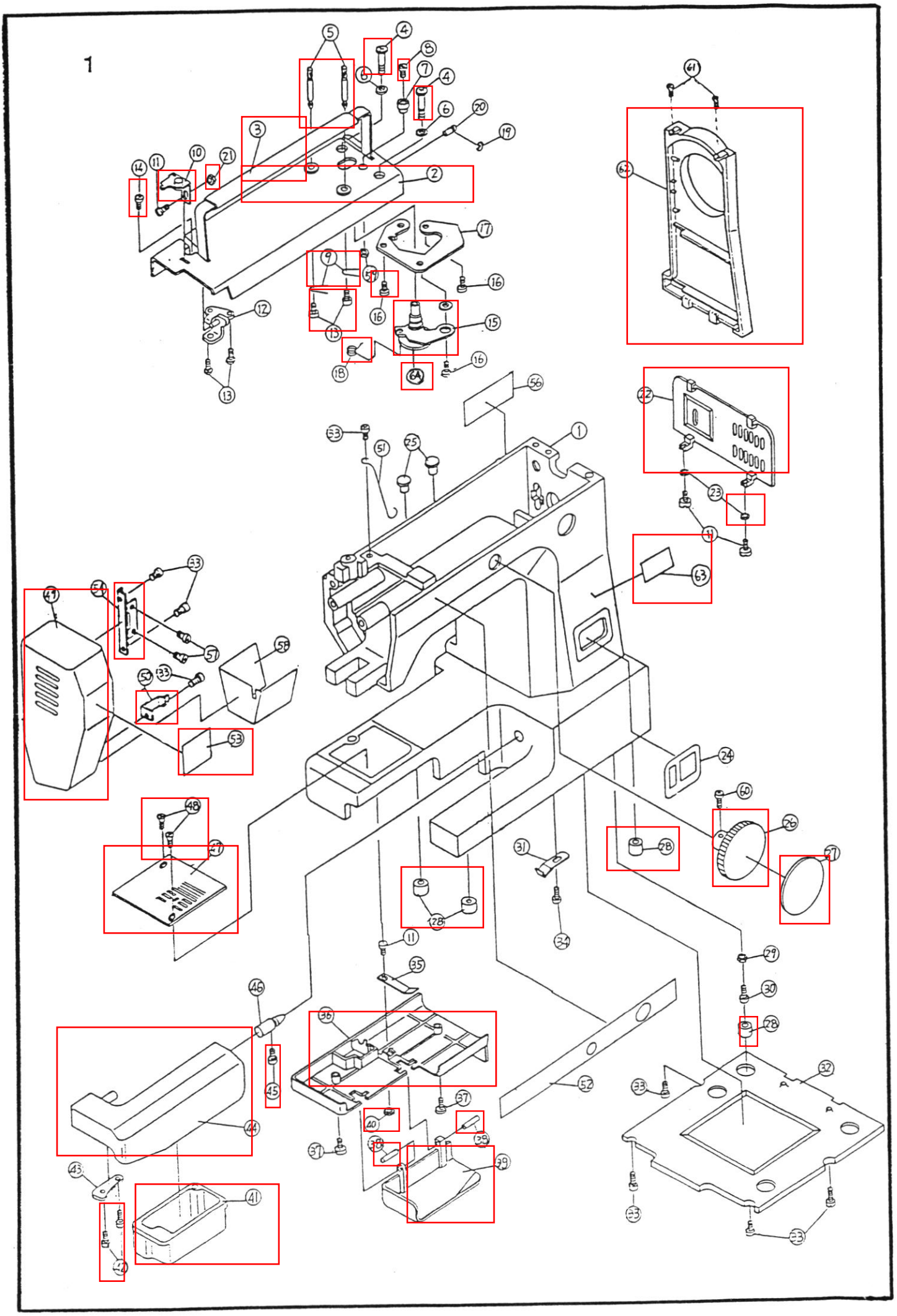

Ref. No.	Sunbeen Part No.	Tavaro Part No.	Name of part
1	380601303	395623-16	Arm/Bed (Model 220i/240i)
1a	380601200	395620-01	Arm/Bed (Model 250i)
2	370182014	395622-92	Arm cover (Model 220i/240i)
2a	370182106	395622-93	Arm cover (Model 250i)
3	370202011	395623-17	Handle comp.
4	301030001	395620-05	Set screw
5	301027005	395620-06	Spool pin A
6	353127007	395622-85	Washer
7	380067002	395620-08	Bobbin winder stopper
8	301018003	395620-09	Set screw
9	353122002	395622-91	Spool pin spring
10	380501003	395622-86	Thread guide comp.
11	301016001	395620-12	Set screw
12	370184005	395622-97	Handle bracket
13	000011912	395620-47	Set screw
14	370190004	395622-84	Set screw
15	360501001	395622-89	Bobbin winder comp.
16	000011912	395620-47	Set screw
17	353124004	395622-94	Bobbin winder holder
18	353126006	395622-88	Bobbin winder spring
19	000000103	395622-00	Snap ring
20	370183004	395622-96	Handle pin
21	301151009	395620-45	Nut
22	351013508	395620-25	Motor cover
23	301245001	395620-20	Washer
24	380027011	395620-26	Feed plate
25	380031029	395620-27	Arm plug
26	370078016	395620-28	Pattern selector dial
27	380129003	395623-18	Dial plate (Model 220i)
27a	380130007	395623-19	Dial plate (Model 240i)
27b	380131008	395620-20	Dial plate (Model 250i)
28	351012002	395620-33	Rubber
29	351011001	395620-34	Nut
30	351010000	395620-35	Adjusting screw
31	370081001	395620-36	Spring plate
32	351009006	395620-37	Base plate
33	301037008	395620-38	Set screw
34	301185002	395620-39	Set screw
35	351008005	395620-40	Spring plate
36	351006070	395620-41	Bottom cover
37	301143008	395620-42	Set screw
38	000003405	395620-43	Spring pin
39	351007071	395620-44	Shuttle race cover
40	301151009	395620-45	Nut
41	370084048	395620-46	Accessory box
42	000011912	395620-47	Set screw
43	370085005	395620-48	Accessory box plate
44	370003043	395620-49	Extension table
45	356017002	395620-50	Set screw
46	351003000	395620-51	Extension pin
47	351056008	395620-52	Needle plate
48	301261003	395620-53	Set screw
49	380090015	395622-99	Face plate
50	301036007	395620-55	Face plate spring
51	360055005	395620-56	Lamp wire setter (Model 220i/240i)
51a	380079007	395620-57	Lamp wire setter (Model 250i)
52	380135002	395623-21	Arm panel (Model 220i)
52a	380136003	395623-22	Arm panel (Model 240i)
52b	380137004	395623-23	Arm panel (Model 250i)
53	380138005	395623-24	Face plate panel (Model 220i)
53a	380139006	395623-25	Face plate panel (Model 240i)
53b	380140000	395623-26	Face plate panel (Model 250i)
54	380502004	395620-66	Face plate hinge
56	380132009	395623-27	Electric rating plate (Model 220i)
56a	380133000	395623-28	Electric rating plate (Model 240i)
56b	380134001	395623-29	Electric rating plate (Model 250i)
57	301008000	395620-21	Set screw
58	380091005	395623-00	Face plate heat-shield plate
59	301193003	395622-98	Nut
60	370048006	395620-17	Hinge screw
61	250087002	395623-12	Set screw
62	380036105	395620-23	Belt cover
63	380128002	395623-30	Feed plate
64	353030002	395623-01	Bobbin winder ring

2

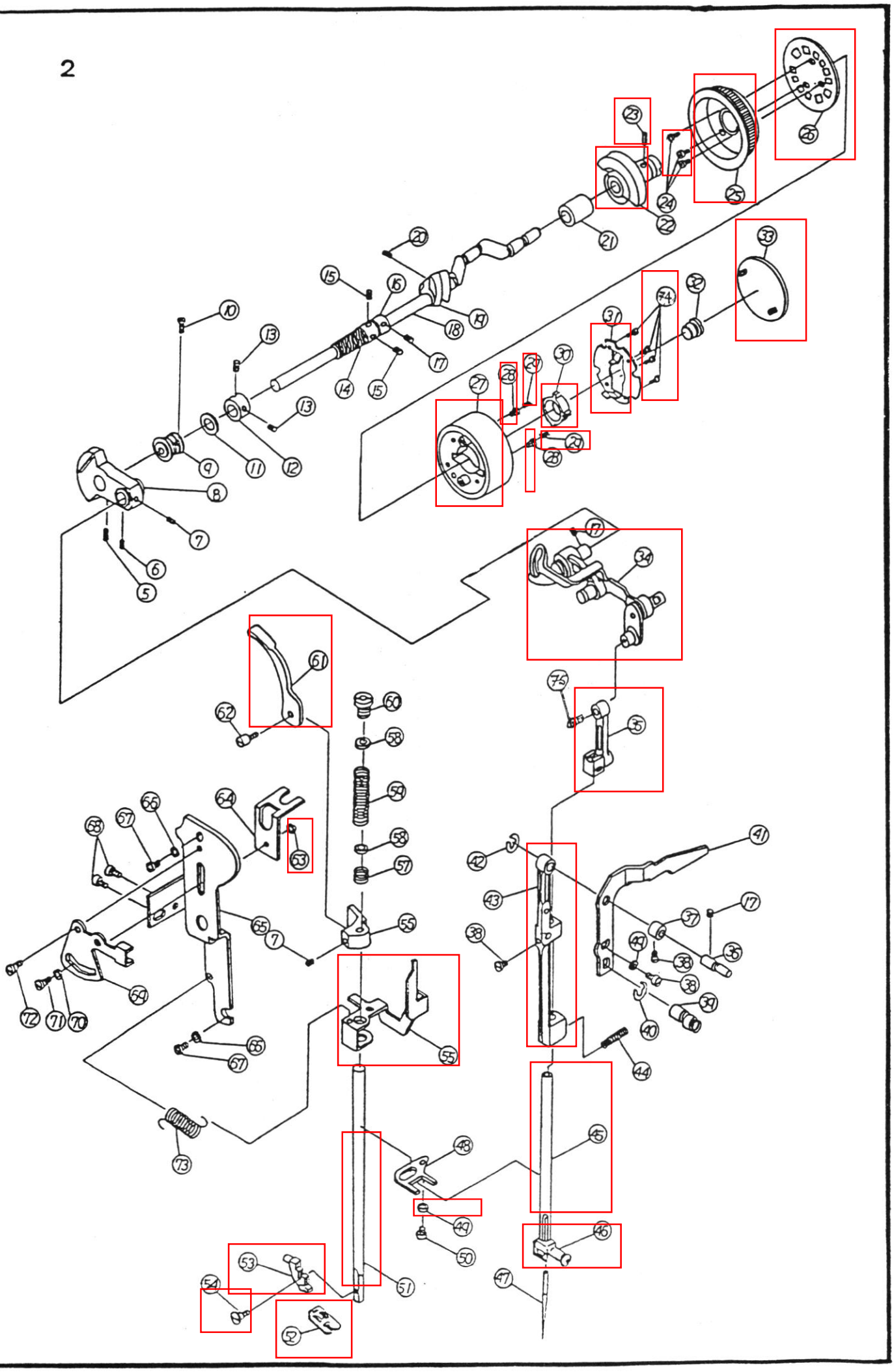

Ref. No.	Sunbeen Part No.	Tavaro Part No.	Name of part
5	000003508	395620-87	Spring pin
6	301068008	395620-88	Set screw
7	301084000	395620-89	Set screw
8	301083009	395620-90	Thread take-up crank
9	301088004	395620-91	Front bushing
10	301092001	395620-92	Set screw
11	301086002	395620-93	Nylon washer
12	301340007	395623-31	Collar
13	301087003	395620-95	Set screw
14	303502005	395620-96	Upper shaft worm gear (Model 220i/240i)
14a	370502006	395620-97	Upper shaft worm gear (Model 250i)
15	301093002	395620-98	Set screw
16	370163008	395620-99	Collar (Model 250i)
17	301046000	395621-00	Set screw
18	370037002	395621-01	Upper shaft
19	370038003	395621-02	Feed cam
20	370039004	395621-03	Set screw
21	301006008	395621-04	Rear bushing
22	353025004	395621-05	Balance weight
23	000003405	395620-43	Spring pin
24	380041000	395621-06	Set screw
25	380010000	395621-07	Belt wheel
26	380011001	395621-08	Gear transmission plate
27	380068014	395621-09	Handwheel
28	380071009	395621-10	Transmission pin
29	380016006	395621-11	Spring
30	380069004	395621-12	Handwheel transmission ring
31	380070008	395621-13	Spring plate
32	380018008	395621-14	Set screw
33	380019021	395621-15	Handwheel cover
34	301544003	395621-16	Take-up lever comp.
35	301503000	395621-17	Needle bar holder comp.
36	301042006	395621-18	Needle bar support pin
37	301250009	395621-19	Collar
38	301016001	395620-12	Set screw
39	301045009	395621-20	Eccentric pin
40	000000206	395621-21	Snap ring
41	301043007	395621-22	Zigzag driving plate
42	000000309	395621-23	Snap ring
43	301041005	395621-24	Needle bar support
44	301047001	395621-25	Spring (Model 220i/240i)
44a	380080001	395621-26	Spring (Model 250i)
45	260042006	395623-14	Needle bar
46	260502009	395623-15	Needle clamp comp.
47	301244000		Needle
48	301048002	395621-29	Needle bar stopper plate
49	301245001	395620-20	Washer
50	301049003	395621-30	Set screw
51	301061001	395621-31	Presser bar
52	353012008	395236-00	Z/Z Presser foot
53	301522005	395047-66	Presser foot holder
54	301339003	395522-20	Thumb screw
55	370036001	395621-32	Tension release lever A
56	301252001	395621-33	Guide bracket
57	301065005	395621-34	Spring
58	301066006	395621-35	Washer
59	370012001	395621-36	Presser bar spring
60	370013002	395621-37	Pressure regulator collar
61	370154006	395621-38	Presser bar lever
62	301070003	395621-39	Hinge screw
63	301151009	395620-45	Nut
64	370016005	395621-40	Pressure regulator plate
65	370015004	395621-42	Light socket bracket
66	301257006	395621-43	Washer
67	301037008	395620-38	Set screw
68	301234007	395621-44	Set screw
69	370017006	395621-45	Pressure adjusting plate
70	370099002	395621-46	Washer
71	370018007	395621-47	Hinge screw
72	370194008	395623-32	Hinge screw
73	370147006	395621-49	Spring
74	000011912	395620-47	Set screw
75	301100003	395623-33	Set screw

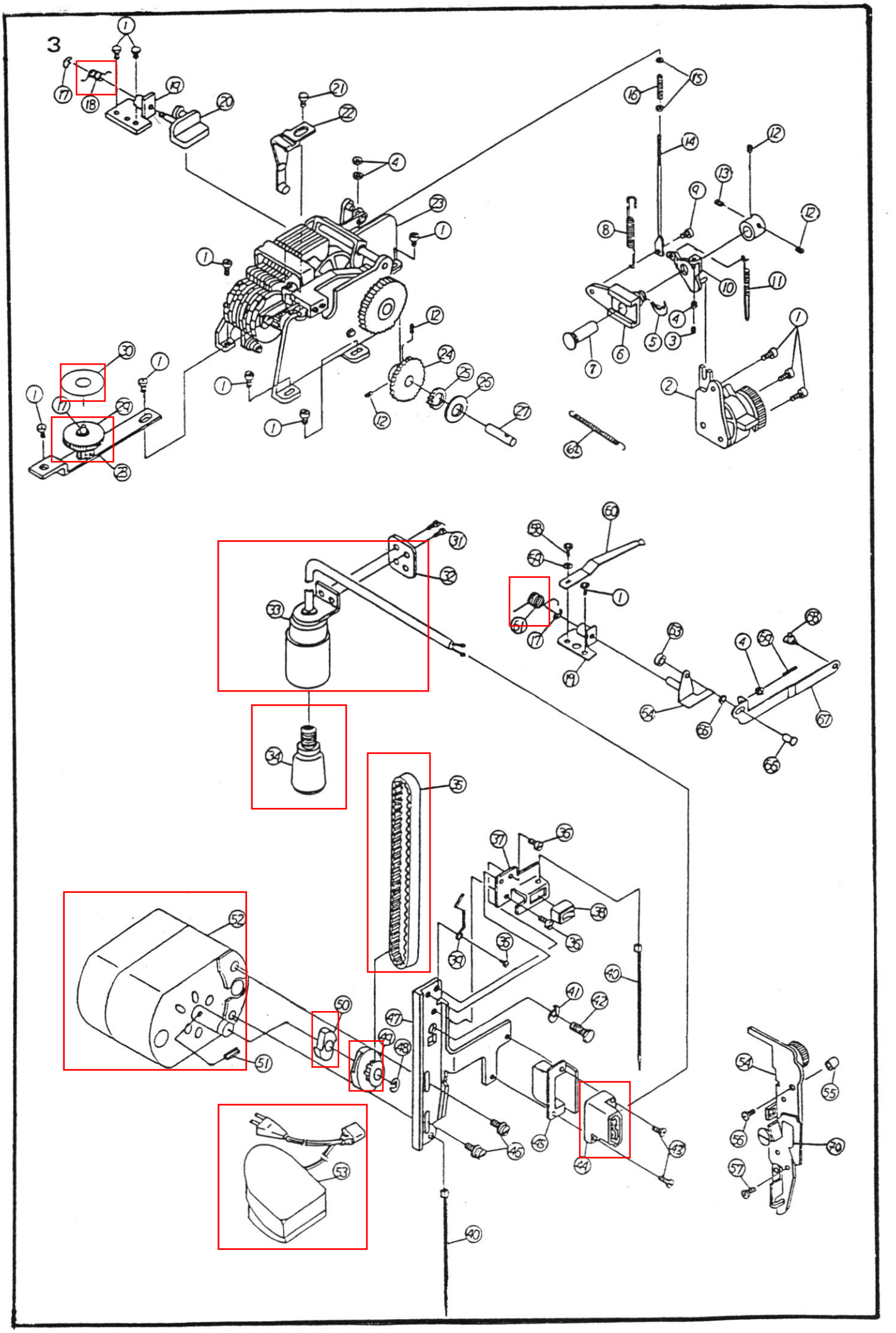
3

Ref. No.	Sunbeen Part No.	Tavaro Part No.	Name of part
1	301008000	395620-21	Set screw
2	380607022	395623-34	Stitch length dial comp.
3	301289007	395621-51	Set screw
4	301151009	395620-45	Nut
5	000000505	395621-52	Snap ring
6	250081006	395623-35	Feed regulator
7	301152000	395621-54	Feed regulator shaft
8	301155003	395621-55	Feed regulator spring
9	301154002	395621-56	Hinge screw
10	250080005	395623-36	Feed regulator bracket
11	303003001	395621-58	Spring (Model 220i/240i)
11a	370045003	395621-59	Spring (Model 250i)
12	301046000	395621-00	Set screw
13	301087003	395620-95	Set screw
14	303002000	395621-60	Stretch stitch rod (Model 220i/240i)
14a	370042000	395621-61	Stretch stitch rod (Model 250i)
15	370044002	395621-62	Washer (Model 250i)
16	370043001	395621-63	Spring (Model 250i)
17	000000206	395621-21	Snap ring
18	380058000	395621-64	Spring (Model 250i)
19	380056008	395621-65	Zigzag mechanism body
20	380057009	395621-66	Zigzag connecting crank B (Model 250i)
21	301185002	395620-39	Set screw
22	301645005	395621-67	Zero adjusting crank comp.
23	375605105	395621-68	Zigzag mechanism comp. (Model 220i)
23a	360607204	395621-69	Zigzag mechanism comp. (Model 240i)
23b	380619005	395621-70	Zigzag mechanism comp. (Model 250i)
24	370076003	395621-71	Pattern selector gear (Model 250i)
25	301247003	395621-72	Wave washer (Model 250i)
26	301159007	395621-73	Washer (Model 250i)
27	370077004	395621-74	Selecting shaft B (Model 250i)
28	380064009	395621-75	Zigzag plate (Model 250i)
29	380065000	395621-76	Zigzag width dial (Model 250i)
30	380075003	395621-77	Dial plate (Model 250i)
31	301234007	395621-44	Set screw
33	380804009	395621-80	Light cord comp.
34	353821101	395621-82	Light bulb
35	301285003	395621-83	Belt
36	301341008	395623-37	Set screw
37	380043002	395621-84	Switch fixation plate
38	450052107	395621-86	Switch
39	380040009	395621-87	Lamp wire setter
40	351047006	395621-88	Band
41	301246002	395621-89	Spring washer
42	301239002	395621-90	Motor bracket set screw
43	351032008	395621-91	Set screw
44	351048007	395621-93	Receptacle
45	351049008	395621-95	Insulating plate
46	351046005	395621-97	Set screw
47	380044003	395621-99	Motor bracket
48	000000103	395622-00	Snap ring
49	301530006	395622-01	Motor pulley comp.
50	301294005	395622-02	Motor clutch
51	000003807	395622-03	Spring pin
52	353811201	395622-06	Motor comp.
53	353812006	395622-09	Controller comp.
54	370507019	395622-10	Tension comp.
55	370034009	395622-11	Washer
56	370033008	395622-12	Set screw
57	301165006	395622-13	Set screw
58	356017002	395620-50	Set screw (Model 220i/240i)
59	301009001	395622-14	Washer (Model 220i/240i)
60	356006008	395622-15	Angle index spring plate (Model 220i/240i)
61	301215002	395622-16	Spring (Model 220i/240i)
62	301208002	395622-17	Spring (Model 220i/240i)
63	301213000	395622-18	Roller (Model 220i/240i)
64	354004000	395622-19	Zigzag connecting crank A (Model 220i/240i)
65	301245001	395620-20	Washer (Model 220i/240i)
66	301212009	395622-20	Riveting pin (Model 220i/240i)
67	303005003	395622-21	Zigzag connecting rod (Model 220i/240i)
68	301218005	395622-22	Hinge screw (Model 220i/240i)
69	301196006	395622-23	Adjusting screw (Model 220i/240i)
70	370025007	395623-07	Check spring

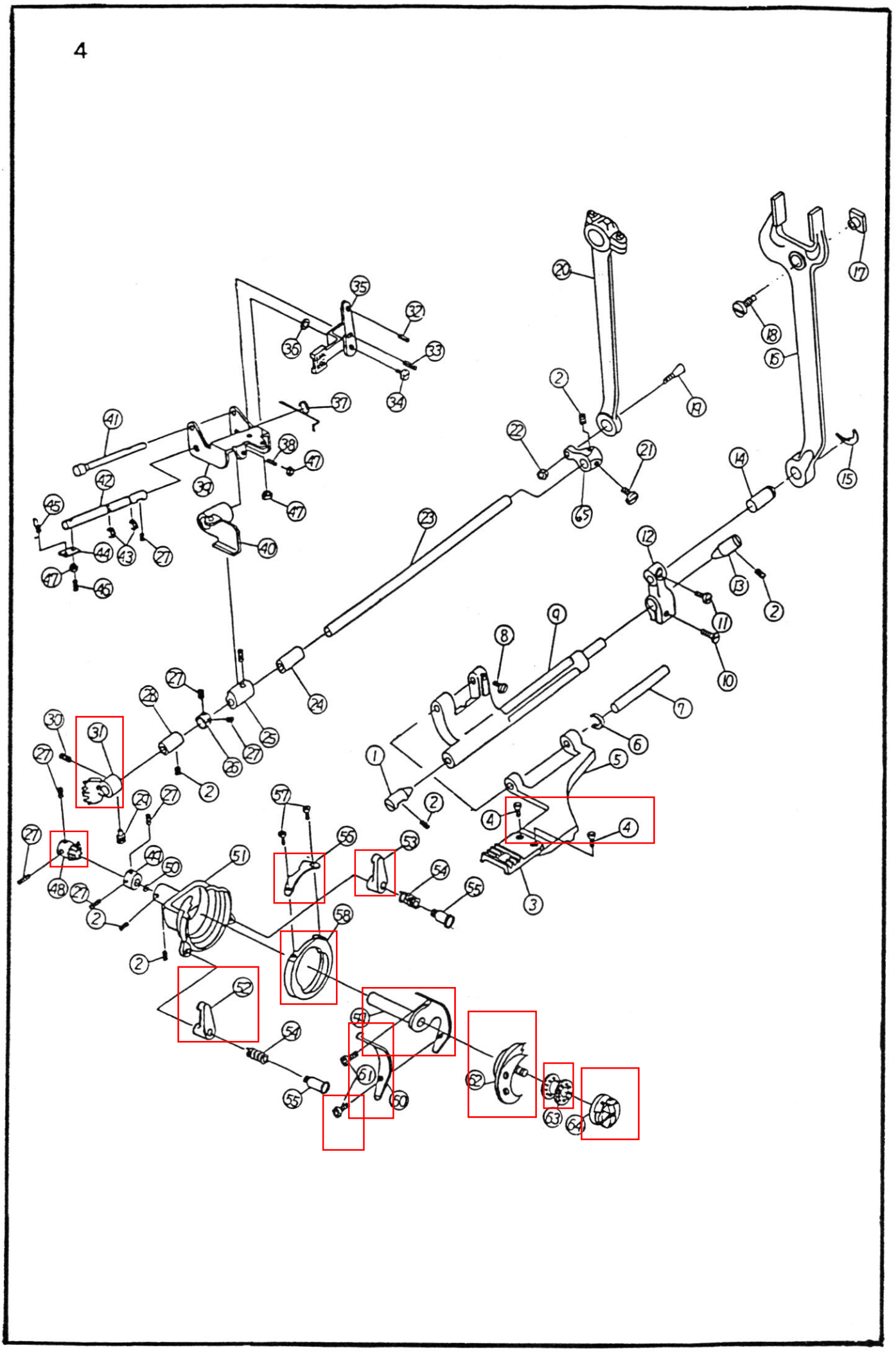

Ref. No.	Sunbeen Part No.	Tavaro Part No.	Name of part
1	301241007	395622-24	Center pin (left)
2	301087003	395620-95	Set screw
3	301174008	395622-25	Feed dog
4	301175009	395622-26	Feed dog set screw
5	301172006	395622-27	Feed dog base
6	000000206	395621-21	Snap ring
7	301173007	395622-28	Feed dog base shaft
8	301131005	395622-29	Set screw
9	301171005	395622-30	Feed rock shaft
10	301178002	395622-31	Set screw
11	301177001	395622-32	Set screw
12	301176000	395622-33	Feed rock shaft
13	301180007	395622-34	Center pin (right)
14	301179003	395622-35	Connecting pin
15	000000402	395622-36	Snap ring
16	301145000	395622-37	Forked rod
17	301147002	395622-38	Forked rod slide block
18	301146001	395622-39	Set screw
19	301106009	395622-40	Taper screw
20	301512002	395622-41	Crank rod comp.
21	353015001	395622-42	Set screw
22	301107000	395622-43	Nut
23	301109002	395622-44	Lower shaft
24	301111007	395622-48	Lower shaft rear bushing
25	301182009	395622-46	Feed lifting cam
26	301112008	395622-47	Collar
27	301046000	395621-00	Set screw
28	301110006	395622-45	Lower shaft rear bushing
29	301114000	395622-49	Set screw
30	301115001	395622-50	Set screw
31	301113009	395622-51	Oscillating shaft gear
32	000003209	395622-52	Spring pin
33	000003302	395622-53	Spring pin
34	355010002	395622-54	Hinge screw
35	351060005	395622-55	Drop feed lever
36	370086006	395622-56	Wave washer
37	301195005	395622-57	Spring
38	370041009	395622-58	Adjusting screw
39	301307002	395622-59	Drop feed body
40	301308003	395622-60	Drop feed plate
41	301310008	395622-61	Drop feed adjusting shaft
42	301309004	395622-62	Drop feed shaft A
43	000000309	395621-23	Snap ring
44	301197007	395622-63	Spring holder
45	301181008	395622-64	Spring
46	301150008	395622-65	Adjusting screw
47	301151009	395620-45	Nut
48	301130105	395622-66	Bevel gear
49	301129008	395622-67	Hook driver shaft collar
50	301128007	395622-68	Nylon washer
51	301328009	395622-69	Hook race body
52	301119005	395622-70	Clasp (left)
53	301118004	395622-71	Clasp (right)
54	301120009	395622-72	Clasp spring
55	301121000	395622-73	Hinge screw
56	301122001	395622-74	Cap spring
57	301123002	395622-75	Set screw
58	301117003	395622-76	Hook race ring
59	301124003	395622-77	Hook driver shaft
60	301126005	395622-78	Hook driver spring
61	301127006	395622-79	Set screw
62	301132004	395622-50	Hook
63	301141006	395620-00	Bobbin
64	301515005	395620-25	Bobbin case comp.
65	353014000	395623-11	Lower shaft crank

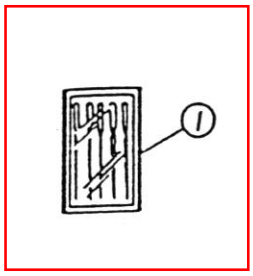
1

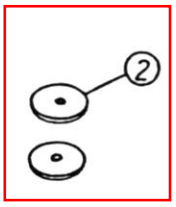
2

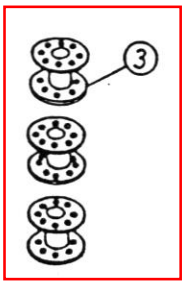
3

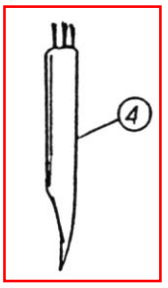
4

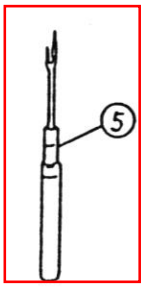
5

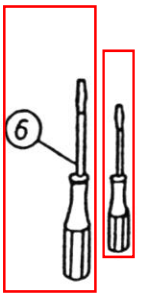
6

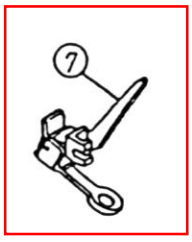
7

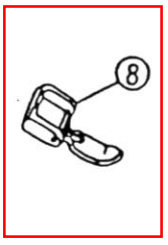
8

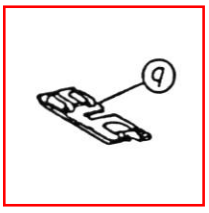
9

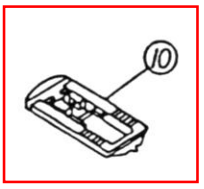
10

11

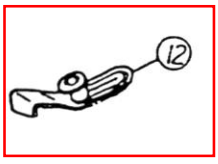
12

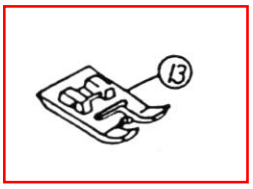
13

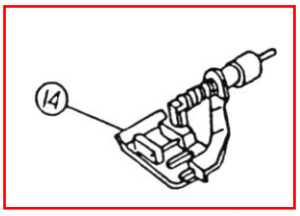
14

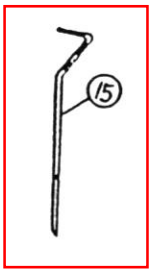
15

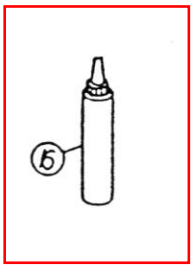
16

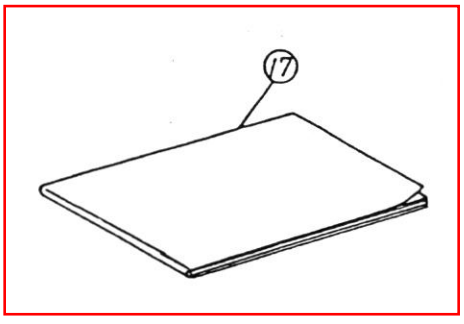
17

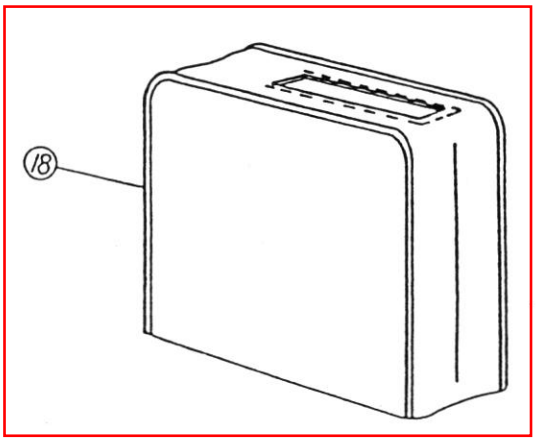
18

Ref. No.	Sunbeen Part No.	Tavaro Part No.	Name of part
1	301634001	424451	Needle assortment
2	301403009	426361	Felt washer
3	301141006	395120-00	Bobbin
4	301448006	494221	Brush
5	303403005	494230	Buttonhole knife
6	301439004	395622-80	Screwdrivers
7	380413007	395276-01	Darning foot
8	301438003	395285-02	Zipper foot
9	301405001	395123-04	Hemmer foot
10	303401003	395273-00	Buttonhole foot
11	301406002	395274-01	Button sewing foot
12	301433008	395622-81	Seam guide
13	301447005	395622-82	Satin stitch foot
14	353431007	395285-02	Blind hem foot
15	301410009	395275-00	Quilting guide
16	353409006	395049-43	Oiler
17a	380406100	395602-00	Instruction book 220i (English)
17b	380407101	395602-01	Instruction book 240i (English)
17c	380408102	395602-02	Instruction book 250i (English)
17d	380449002	395601-07	Instruction book 220i (German/French)
17e	380450006	395607-01	Instruction book 240i (German/French)
17f	380451007	395601-02	Instruction book 250i (German)
17g	380452008	395607-02	Instruction book 250i (French)
17h	380456002	395605-14	Instruction book 220i (Finnish/Swedish)
17i	380457003	395603-12	Instruction book 220i (Danish/Norwegian)
17j	380459005	395611-11	Instruction book 220i (Italian)
18	370427003	395622-83	Dust cover
	381953	395623-08	Accessory set (AUS/NZ/ZA)
	381953-4	395623-09	Accessory set