Second Edition: 06 December 2017

PARTS LIST

MODEL: eXcellence 720PRO

First Edition: 05 September 2017

Modified info.

Modified: 06 December 2017
P26-8: image modified.
P27-8: 866805104 → 866805001

PARTS LIST

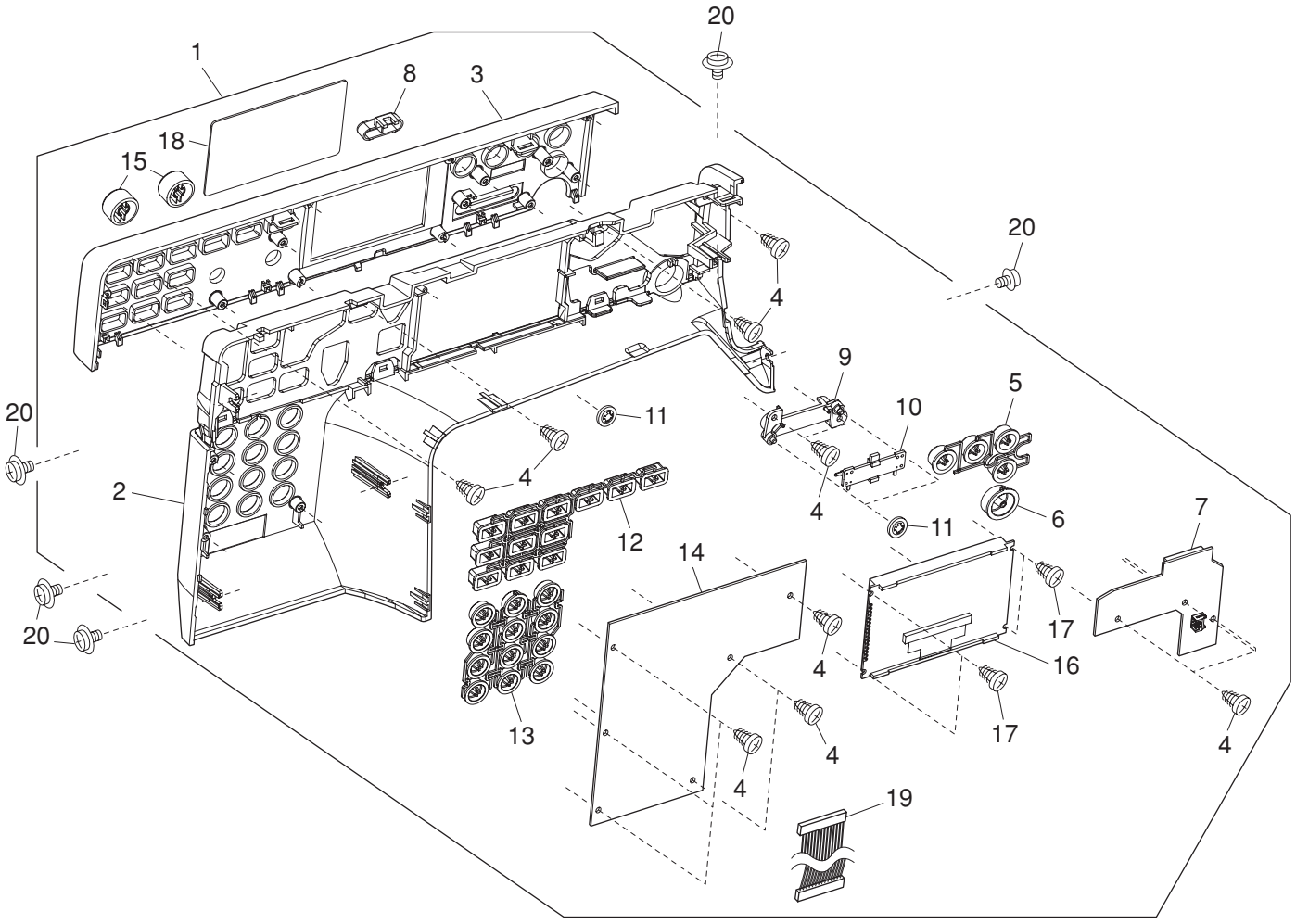
20
1
8
3
18
15
20
4
9
5
10
11
20
4
2
4
6
7
12
11
14
17
20
4
16
13
17
4
4
4
19

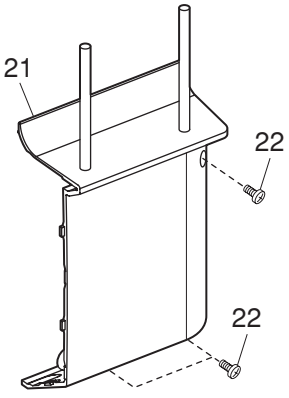
21
22
22

PARTS LIST

KEY NO.	PARTS NO.	DESCRIPTION
1	866622105	Front cover (unit)
2	866048A02	Front cover
3	866049B01	Ornamental panel 1
4	000120203	Setscrew 3x8 (B)
5	866050A01	Function button 1
6	866051A01	Start/stop button
7	866506009	Printed circuit board F (unit)
8	507117029	Speed control slider
9	866052005	Speed control slider guide
10	653507299	Slide volume (unit)
11	000014306	Snap ring CS-3
12	866053A01	Function button 2
13	866054A02	Direct button
14	866507000	Printed circuit board K (unit)
15	866055008	Dial
16	866508001	LCD (unit)
17	000161103	Setscrew 3x6 (B)
18	866056A02	Ornamental panel 2
19	866509002	Relay cable 28 pin
20	000115205	Setscrew TP 4x6
21	866060A02	Power supply cover
22	000103509	Setscrew 4x10

PARTS LIST

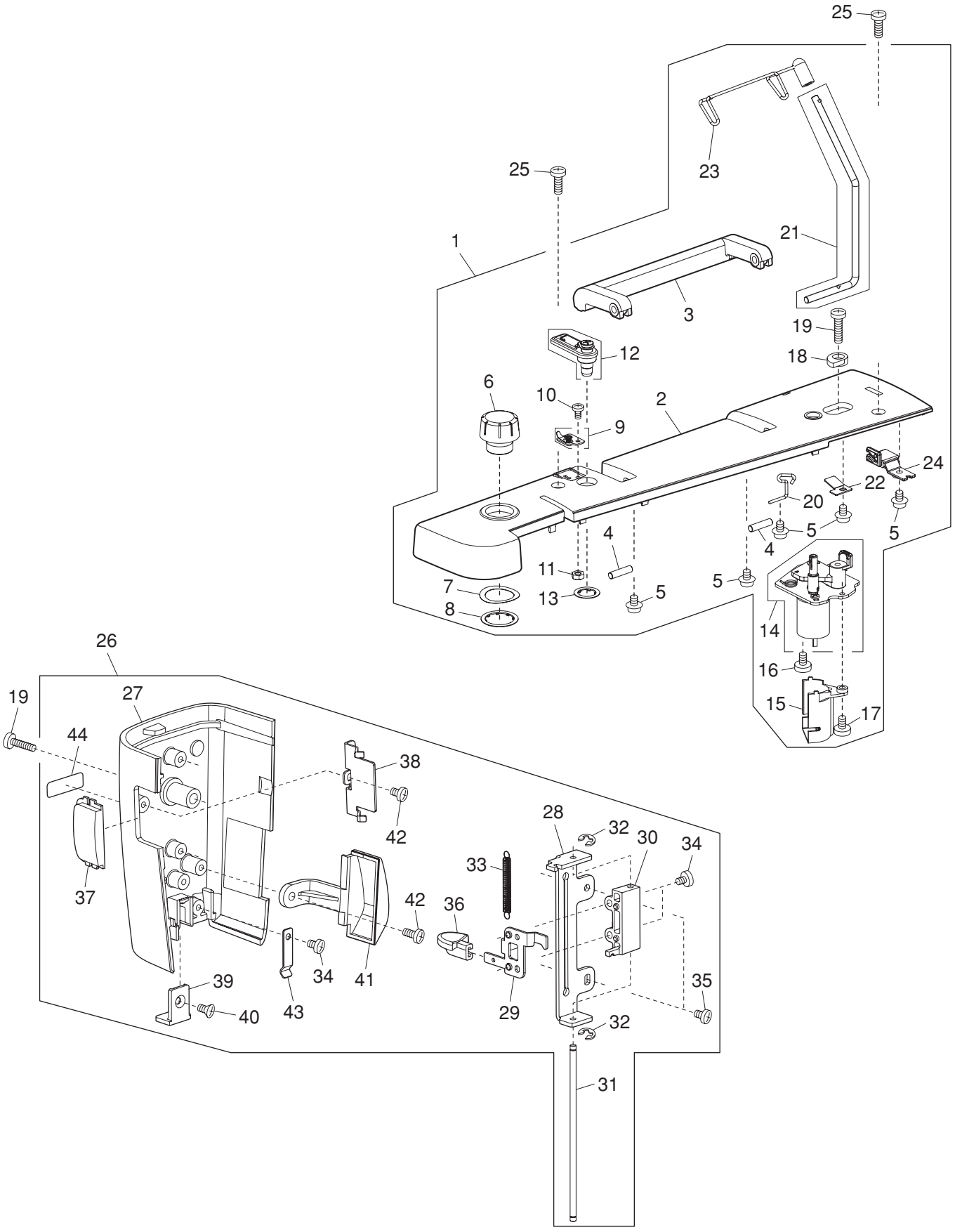
25
23
25
21
1
3
19
12
18
6
10
2
9
24
22
20
5
5
4
4
11
5
7
13
5
8
14
16
15
17
26
19
27
44
38
42
28
32
30
34
33
37
42
36
34
41
39
35
40
43
29
32
31

PARTS LIST

KEY NO.	PARTS NO.	DESCRIPTION
1	866626006	Top cover (unit)
2	866078A01	Top cover
3	846015004	Carrying handle
4	846016005	Carrying handle support pin
5	000115205	Setscrew TP 4x6
6	866079008	Presser foot pressure adjusting dial
7	846018007	Washer
8	000017907	Snap ring CS-20
9	846654001	Top cover thread guide (2) (unit)
10	000066705	Setscrew 3x8
11	000060857	Nut 3-1-5.5
12	846604006	Thread guide (unit)
13	000014409	Snap ring CS-8
14	846606101	Bobbin winder (unit)
15	846179007	Bobbin winder motor cover
16	000101415	Setscrew 4x6
17	000103509	Setscrew 4x10
18	846177005	Bobbin winder stopper
19	000104119	Setscrew 4x20
20	846021003	Top cover thread guide (3)
21	846605007	Thread guide stand (unit)
22	846022004	Thread guide stand spring
23	846197001	Thread guide
24	866627007	Thread guide set plate (unit)
25	000103107	Setscrew 4x14
26	866625005	Face plate (unit) (U.S.A.) (Australia) (Continental Europe) (Russia)
	866625108	Face plate (unit) (Canada)
27	866073105	Face plate
28	866074003	Threader base plate
29	766075004	Threader driving plate
30	865025006	Threader bushing
31	865026007	Threader lever shaft
32	000002301	Snap ring E-2
33	865027008	Threader lever spring
34	000078319	Setscrew 3x6
35	000103004	Setscrew 3.5x6
36	866076005	Threader lever
37	846012A01	Presser foot pressure indicator window
38	866077006	Presser plate
39	840602109	Thread cutter (unit)
40	000095105	Setscrew 3x5
41	846373003	Face plate cover
42	810220003	Setscrew
43	859233000	Magnifier fixing plate
44	100517008	Caution sticker (Canada)

PARTS LIST

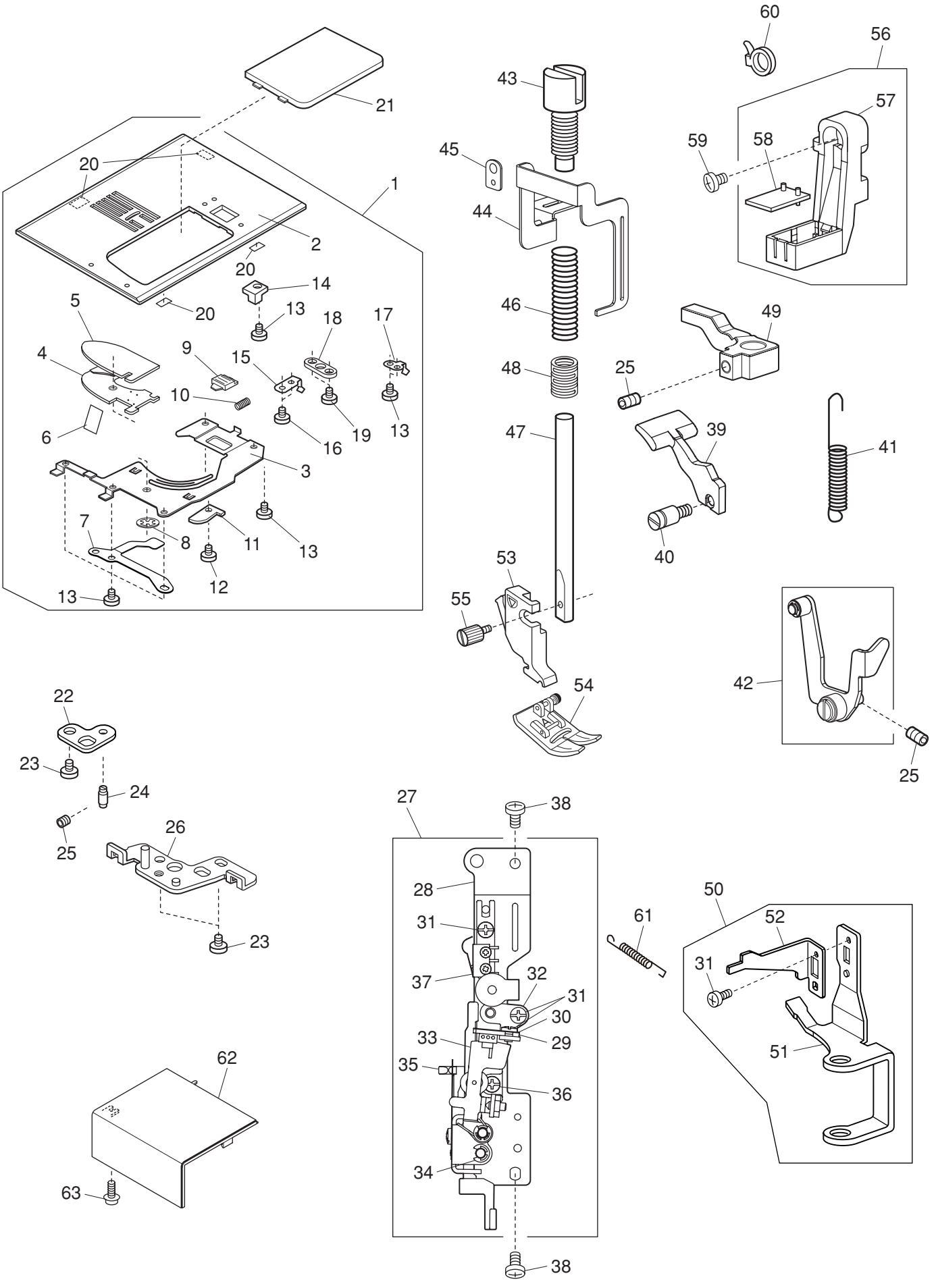
1
2
3
4
5
6
7
8
9
10
11
12
13
14
15
16
17
18
19
20
21
22
23
24
25
26
27
28
29
30
31
32
33
34
35
36
37
38
39
40
41
42
43
44
45
46
47
48
49
50
51
52
53
54
55
56
57
58
59
60
61
62
63

PARTS LIST

KEY NO.	PARTS NO.	DESCRIPTION
1	861606016	Needle plate (unit)
2	861013010	Needle plate
3	861014000	Hook cover plate supporter
4	809134005	Hook cover plate supporter base
5	809135006	Guide holder
6	809137008	Cutter
7	809184000	Spring
8	000014306	Snap ring CS-3
9	825016000	Hook cover plate release button
10	825017001	Spring
11	809044203	Rotation stopper
12	000097613	Setscrew 2x4
13	820374004	Setscrew 2x2.3
14	859046004	Needle plate sensor block
15	859047016	Spring
16	000169709	Setscrew 2x2.3
17	859245005	Spring 2
18	859271000	Needle plate supporter
19	000102807	Setscrew 2x4
20	859272104	Rubber sticker
21	809136100	Hook cover plate
22	860003025	Needle plate nut set plate
23	810220106	Setscrew
24	859270009	Needle plate positioning pin
25	000111201	Hexagonal socket screw 4x4
26	859247018	Needle plate adjusting plate
27	866613000	Front bracket (unit)
28	866028002	Front bracket
29	852502127	Printed circuit board G1 (unit)
30	853028002	Insulation paper
31	000101105	Setscrew 3x4
32	846044002	Sensor base plate
33	843625406	Buttonhole lever (unit)
34	000002105	Snap ring E-3
35	830057021	Buttonhole lever guide
36	000103808	Setscrew 3x5
37	858613108	Presser foot lifter switch (unit)
38	000081005	Setscrew 4x8
39	866021005	Presser foot lifter
40	859028000	Hinge screw
41	859029001	Spring
42	866611008	Thread tension release lever (unit)
43	846042103	Presser foot pressure adjusting screw
44	866027104	Presser foot pressure indicator
45	866087009	Presser foot pressure indicator needle set plate
46	866024008	Presser bar spring
47	859082002	Presser bar
48	859210001	Spring supporter
49	866026000	Presser bar supporter
50	866612009	Presser bar lifter (unit)
51	866025009	Presser bar lifter
52	846344005	Presser bar lifter switch set plate
53	859801005	Presser foot (unit)
54	859802006	Zigzag foot
55	858274000	Thumbscrew
56	866614001	LED cover 1 (unit)
57	866029003	LED cover 1
58	858511024	Printed circuit board L2 (unit)
59	000078319	Setscrew 3x6
60	000053008	Cord binder
61	844038018	Needle bar supporter spring
62	866061007	Thread cutter cover
63	000114709	Setscrew TP 3x6

PARTS LIST

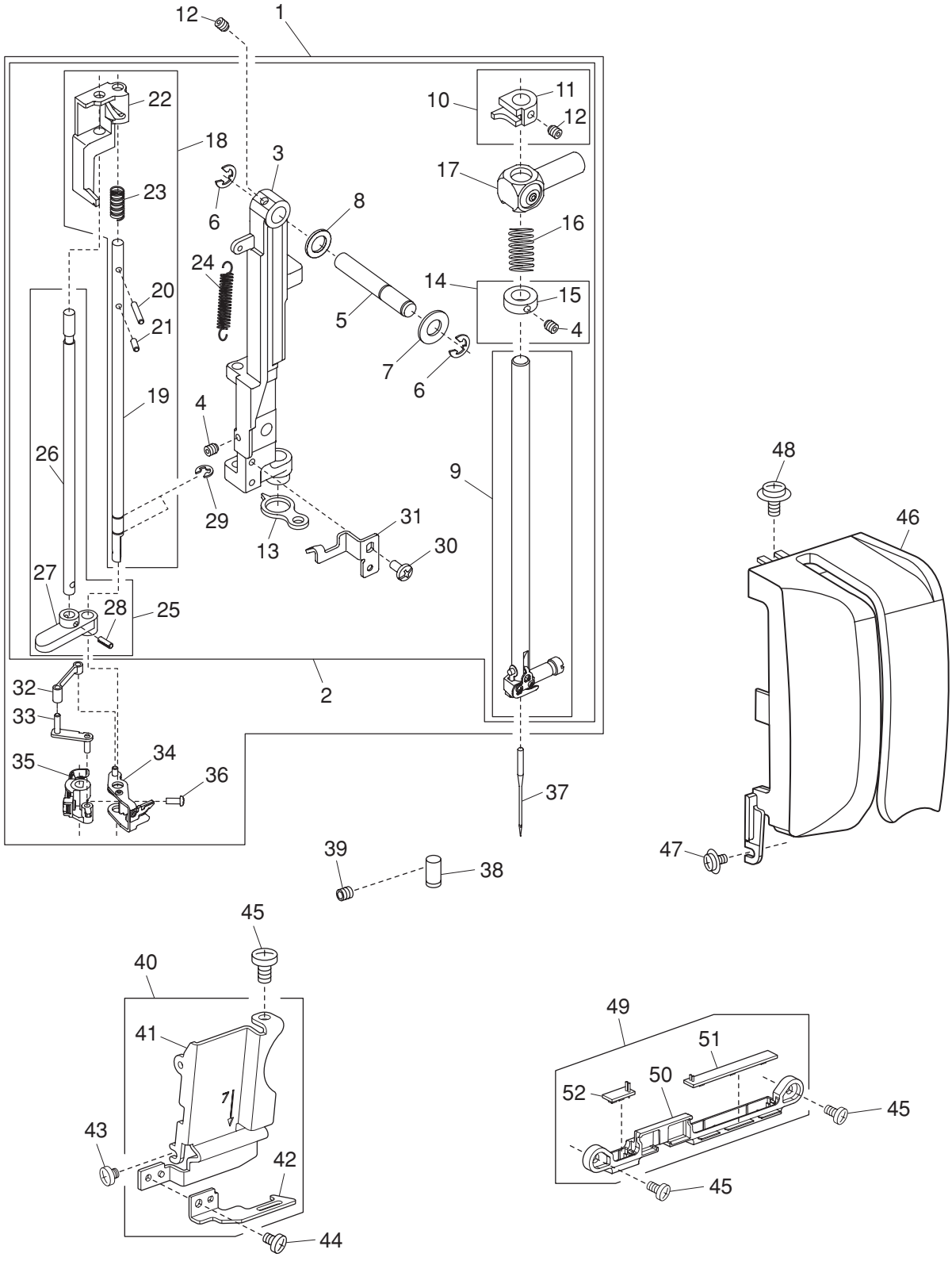
12
1
22
18
3
10
11
12
17
23
6
8
16
24
20
14
15
5
4
21
7
6
19
4
26
9
48
29
31
46
13
30
27
28
25
2
32
33
35
34
36
37
39
38
47
45
40
41
49
51
50
52
45
43
42
45
44

PARTS LIST

KEY NO.	PARTS NO.	DESCRIPTION
1	862623218	Needle bar supporter (whole unit)
2	862655208	Needle bar supporter (unit)
3	858250000	Needle bar supporter
4	000111902	Hexagonal socket screw 3x4
5	735144006	Needle bar supporter pin
6	000002507	Snap ring E-4
7	000070609	Washer 6
8	673022002	Washer
9	858538201	Needle bar (unit)
10	858540000	Rotation pin stopper (unit)
11	858254004	Rotation pin stopper
12	000111201	Hexagonal socket screw 4x4
13	829027006	Supporter guide plate
14	858541001	Threader guide ring (unit)
15	858276002	Threader guide ring
16	858172007	Needle bar supporter spring
17	846515009	Needle bar supporter (unit)
18	862624105	Threader shaft (unit)
19	858255016	Threader shaft
20	000265500	Guide pin 2x12-CH
21	000265603	Guide pin 2x6-CH
22	862055006	Threader arm
23	863128004	Needle threader spring
24	858258019	Needle threader return spring
25	862625003	Threader supporter shaft (unit)
26	858259009	Threader supporter shaft
27	858260003	Threader guide
28	000022204	Spring pin 2x6 (K)
29	000001207	Snap ring E-2.5
30	000078320	Setscrew 3x6
31	862064008	Spring supporter
32	858265008	Link plate 1
33	858266009	Link plate 2
34	862626026	Threader guard plate (unit)
35	862627005	Hook holder (unit)
36	000230403	Setscrew 2x5
37	647814031	Needle
38	827083004	Supporter guide pin
39	000216805	Hexagonal socket screw 3x3
40	866623003	Arm thread guide (unit)
41	866057000	Arm thread guide
42	866058001	Threader guide plate
43	000097406	Setscrew 3x3
44	000078319	Setscrew 3x6
45	000081005	Setscrew 4x8
46	866059A01	Thread guide cover
47	000114709	Setscrew TP 3x6
48	000115607	Setscrew TP 4x8
49	866620000	LED cover 2 (unit)
50	866042002	LED cover 2
51	859506018	Printed circuit board L1 (unit)
52	859525183	Printed circuit board L2 (unit)

PARTS LIST

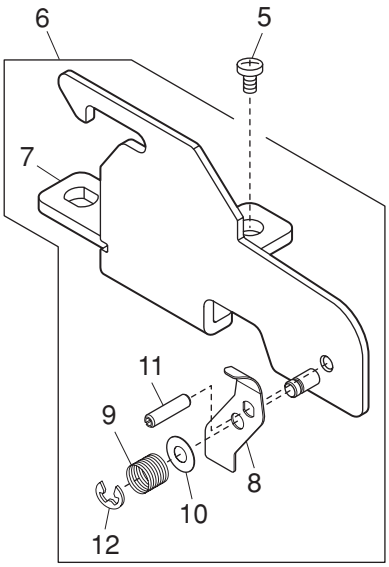

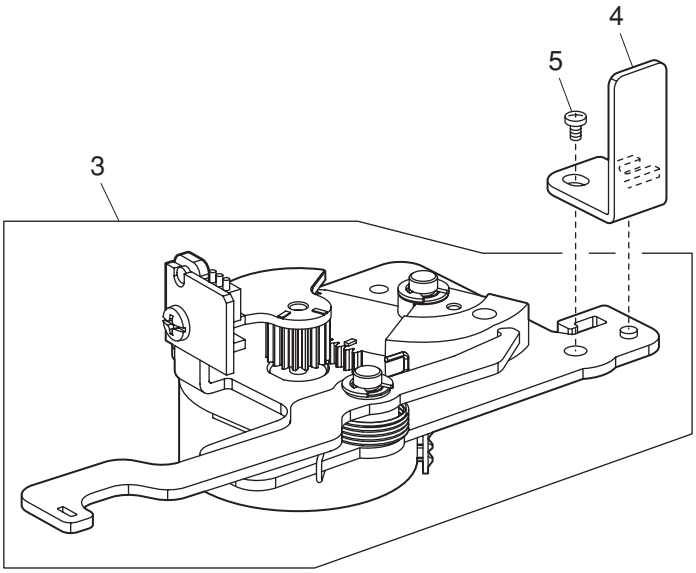

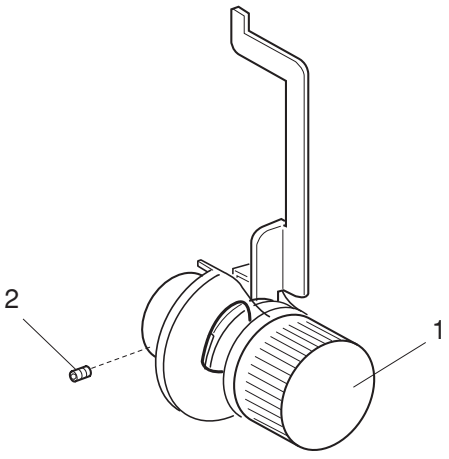

PARTS LIST

KEY NO.	PARTS NO.	DESCRIPTION
1	846516608	Thread tension (unit)
2	000111201	Hexagonal socket screw 4x4
3	866616003	Thread tension release motor (unit)
4	866035002	Front cover set plate
5	000081005	Setscrew 4x8
6	866602006	Top cover thread guide (unit)
7	866004002	Top cover thread guide
8	846071008	Pre-tension plate
9	846261007	Pre-tension spring
10	825303007	Washer
11	000020109	Spring pin
12	000002301	Snap ring E-2

PARTS LIST

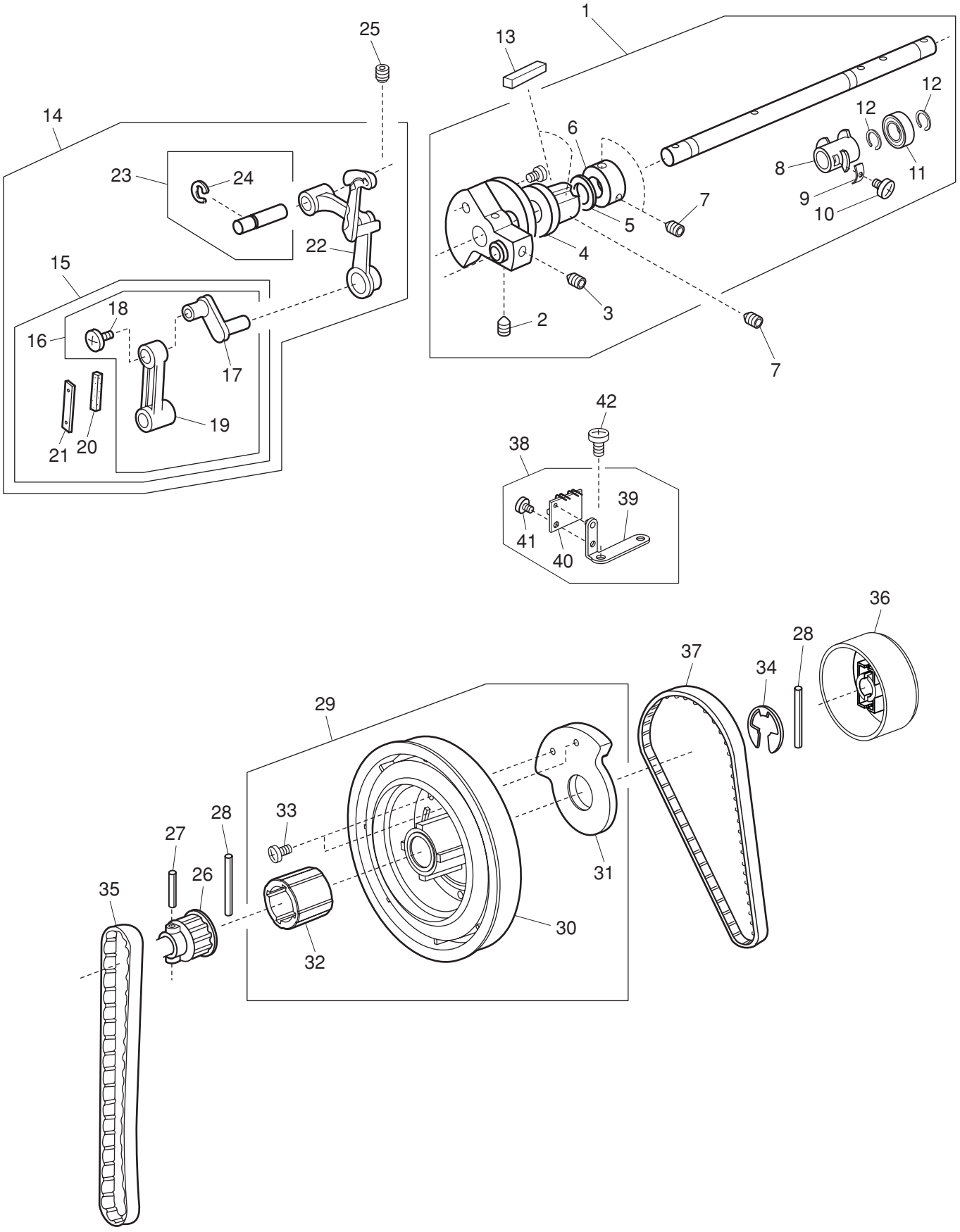
1
2
3
4
5
6
7
7
8
9
10
11
12
12
13
14
15
16
17
18
19
20
21
22
23
24
25
26
27
28
28
29
30
31
32
33
34
35
36
37
38
39
40
41
42

PARTS LIST

KEY NO.	PARTS NO.	DESCRIPTION
1	866601005	Upper shaft (unit)
2	000111706	Hexagonal socket screw 5x8
3	000110901	Hexagonal socket screw 5x4
4	670079304	Upper shaft front bushing
5	000040105	Washer
6	767077017	Ring
7	000111304	Hexagonal socket screw 5x5
8	862002008	Upper shaft shield plate
9	859033008	Washer
10	000080406	Setscrew 3x10
11	767178008	Ball bearing
12	000032702	Snap ring crescent
13	731312005	Felt
14	865618002	Thread take-up lever (whole unit)
15	846615103	Needle bar crank (unit)
16	843543007	Needle bar crank pin (unit)
17	652143005	Needle bar crank pin
18	647139002	Needle bar crank pin cap
19	650039001	Needle bar crank rod
20	650040005	Felt
21	650041006	Spring
22	820511108	Thread take-up lever (unit)
23	650626001	Thread take-up lever pin (unit)
24	000002806	Snap ring E-6
25	000111201	Hexagonal socket screw 4x4
26	858052000	Upper shaft gear
27	000004303	Spring pin 3x20
28	000024206	Spring pin 3x30
29	866628008	Belt wheel (unit)
30	858054002	Belt wheel
31	862003009	Clutch cam
32	866081003	Balance weight
33	000066705	Setscrew 3x8
34	000030009	Snap ring E-10
35	846098001	Timing belt 178
36	858055003	Handwheel
37	858118005	Timing belt 168
38	861620407	Upper shaft sensor (unit)
39	861039001	Sensor set plate
40	807505108	Printed circuit board P (unit)
41	000101105	Setscrew 3x4
42	000081005	Setscrew 4x8

PARTS LIST

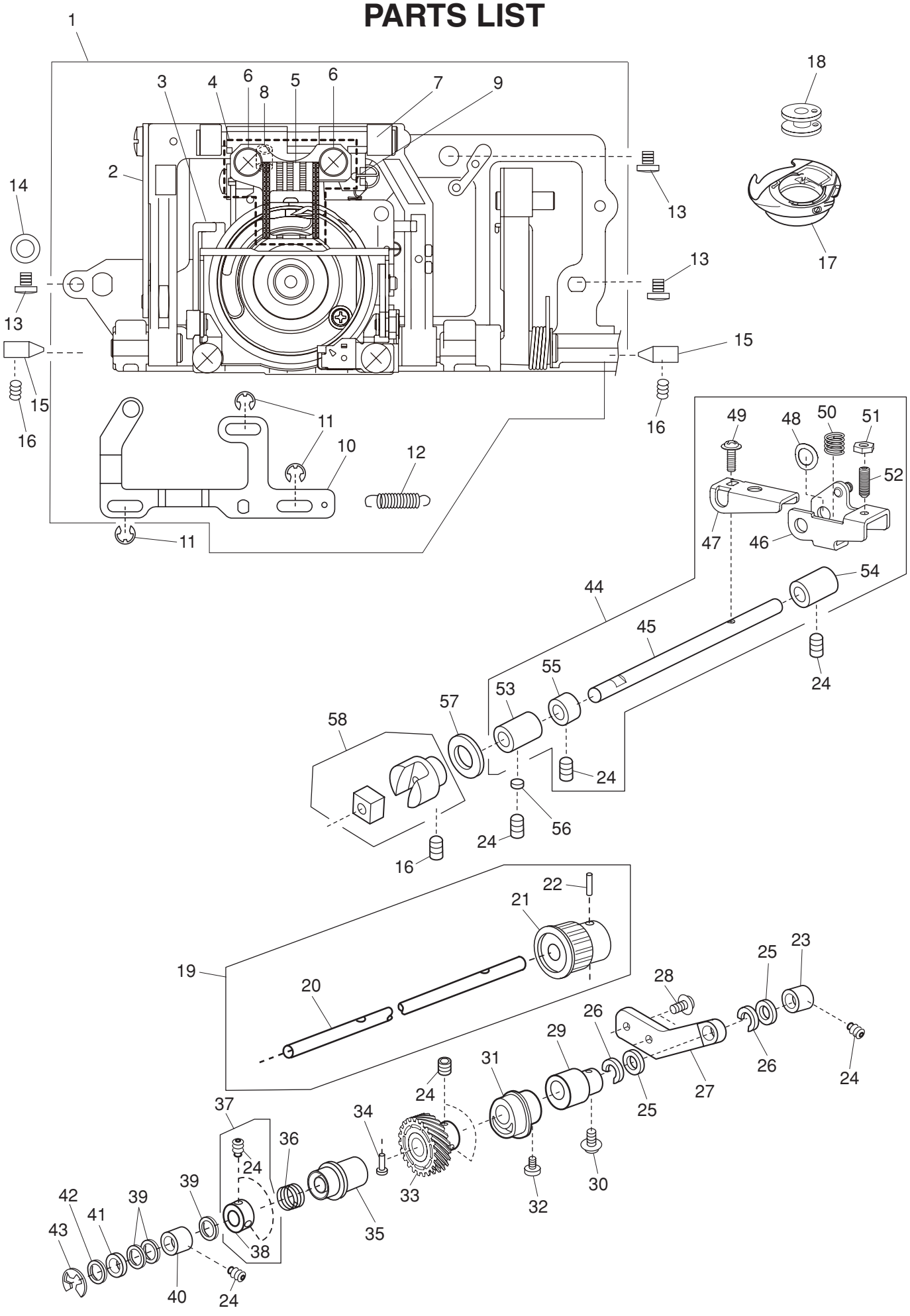
1
2
3
4
5
6
6
7
8
9
10
11
11
12
13
13
13
14
15
15
16
16
16
17
18
19
20
21
22
23
24
24
24
24
24
24
24
25
25
26
26
27
28
29
30
31
32
33
34
35
36
37
38
39
39
40
41
42
43
44
45
46
47
48
49
50
51
52
53
54
55
56
57
58

PARTS LIST

KEY NO.	PARTS NO.	DESCRIPTION
1	861625505	Feed rock shaft (whole unit)
2	846629203	Feed rock shaft (unit)
3	861626207	Hook race (unit)
4	859639000	Feed base (unit)
5	859113003	Feed dog
6	000104005	Setscrew 3.5x8
7	825099007	Feed base shaft
8	000111407	Hexagonal socket screw 4x6
9	825103005	Feed base spring
10	858138001	Drop plate
11	000002105	Snap ring E-3
12	661018008	Spring
13	000081005	Setscrew 4x8
14	000070506	Washer 4
15	738055008	Straight pin
16	000111304	Hexagonal socket screw 5x5
17	858570009	Bobbin holder (unit)
18	102261103	Bobbin
19	866607001	Lower shaft (unit)
20	866014005	Lower shaft
21	650073007	Lower shaft gear
22	000004200	Spring pin 3x18
23	650079003	Lower shaft bushing (rear)
24	000111201	Hexagonal socket screw 4x4
25	822070003	Felt (1)
26	822112008	Felt holder（1）
27	858058006	Lower shaft supporter
28	000115700	Setscrew TP 4x10
29	846379009	Feed cam
30	000149600	Setscrew 3x14
31	866015006	Feeding lever cam
32	000066705	Setscrew 3x8
33	808137005	Lower shaft gear
34	820161006	Feed lifting pin
35	846103000	Feed lifting cam
36	825093001	Feed lifting cam spring
37	820672005	Lower shaft ring (unit)
38	820166001	Lower shaft ring
39	000038502	Washer
40	858060001	Lower shaft bushing (front)
41	735143005	Felt
42	858177002	Lower shaft washer
43	000002806	Snap ring E-6
44	866604008	Feed shaft (unit)
45	866007005	Feed shaft
46	858129009	Feed arm 1
47	858130003	Feed arm 2
48	810207004	Washer
49	000201302	Setscrew TP 3x10
50	589040002	Spring
51	000160102	Adjustable lock nut 4
52	000177401	Hexagonal socket screw 4x12
53	625144002	Feed shaft bushing (front)
54	650092002	Feed shaft bushing (rear)
55	820387000	Ring
56	650175000	Washer
57	823110009	Felt
58	625508008	Feed regulator (unit)

PARTS LIST

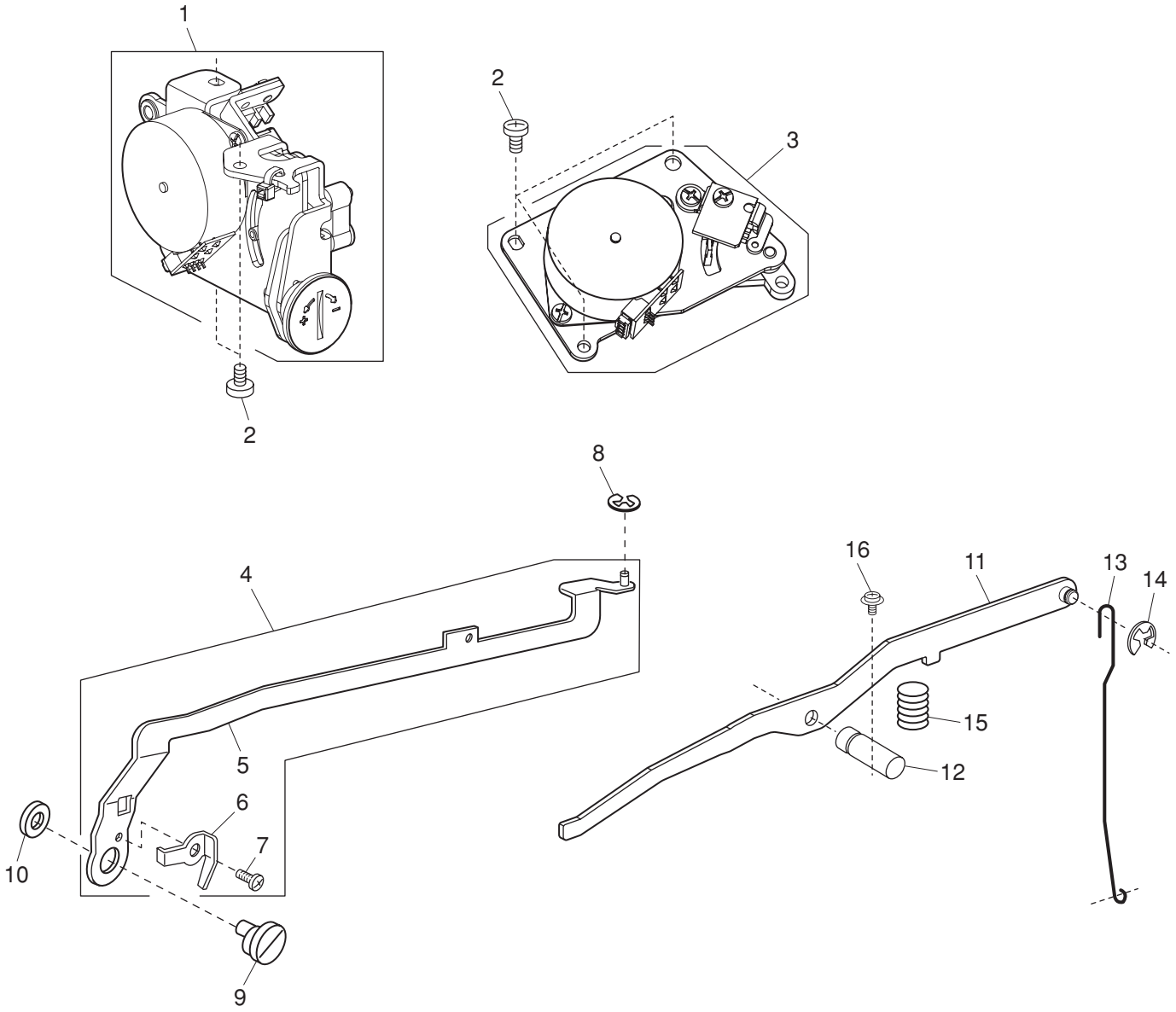

PARTS LIST

KEY NO.	PARTS NO.	DESCRIPTION
1	866605009	Feed motor (unit)
2	000081005	Setscrew 4x8
3	865616103	Zigzag width motor (unit)
4	859610005	Zigzag width rod (unit)
5	859031017	Zigzag width rod
6	827088009	Zigzag width rod spring
7	820373003	Setscrew 2x3
8	000002105	Snap ring E-3
9	678084100	Eccentric pin
10	000072014	Washer 5
11	866030007	Knee lifter lever
12	652042003	Knee lifter shaft
13	846337005	Rod
14	000001609	Snap ring E-5
15	846173001	Spring
16	000115607	Setscrew TP 4x8
17	859627016	Upper feed foot (unit)
18	846327002	Pin (1)
19	866610007	Upper feed adjusting base plate (unit)
20	866019000	Upper feed adjusting base plate
21	866020004	Upper feed adjusting dial
22	000014007	Snap ring CS-4
23	653006101	Cap
24	846353007	Dial leaf
25	000101105	Setscrew 3x4

PARTS LIST

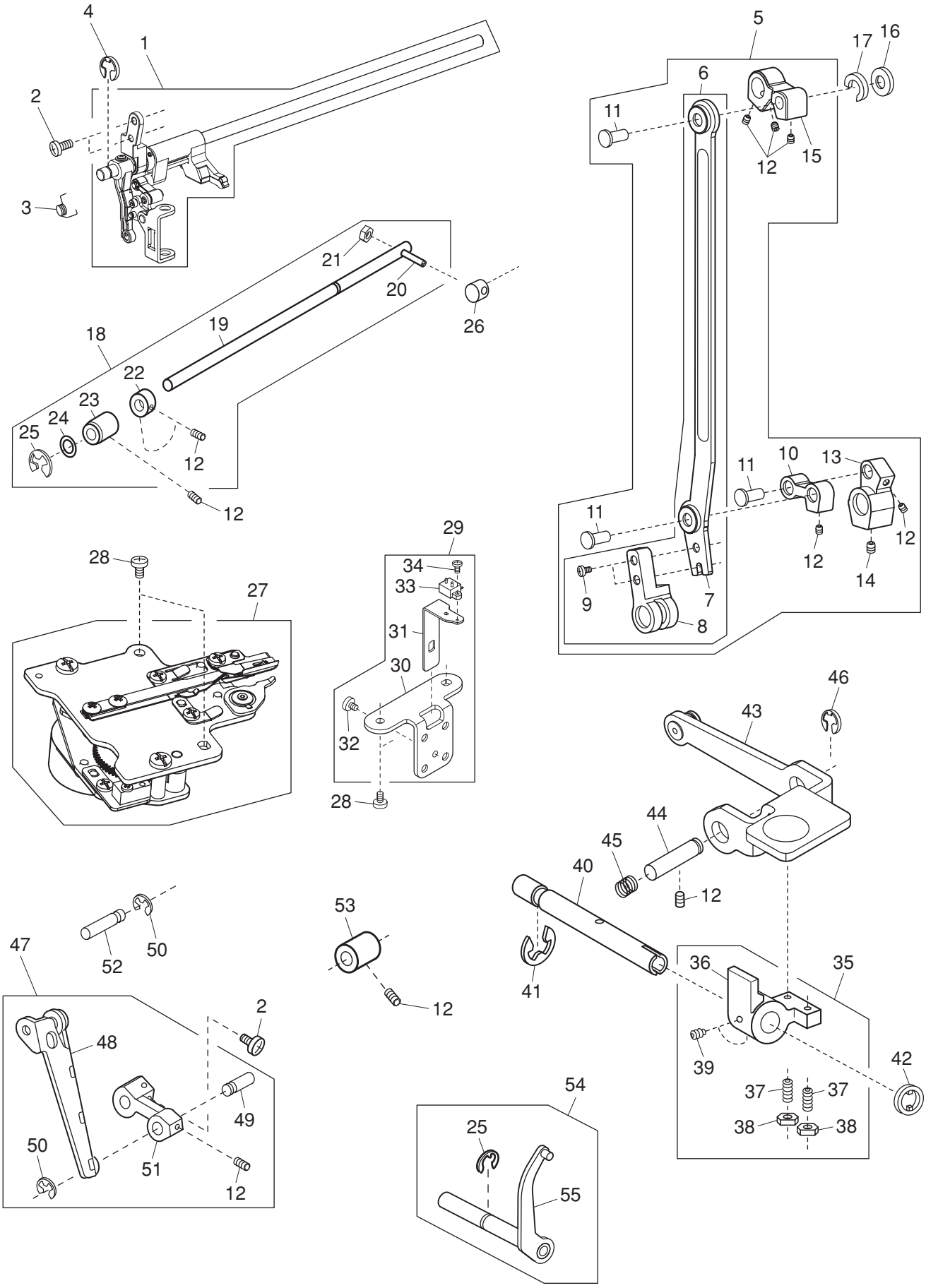
4
1
2
3
21
20
26
18
19
22
23
24
25
12
12
5
17
16
6
11
12
15
11
10
13
12
12
14
11
9
7
8
28
27
29
34
33
31
30
32
28
46
43
44
45
40
12
41
53
12
47
52
50
2
48
49
50
51
12
36
35
39
42
37
37
38
38
54
25
55

PARTS LIST

KEY NO.	PARTS NO.	DESCRIPTION
1	866608002	Upper feed upper shaft (unit)
2	000103509	Setscrew 4x10
3	866017008	Spring
4	000002909	Snap ring E-7
5	863632006	Upper feed adjusting arm (unit)
6	863633007	Upper feed connecting link (unit)
7	863110003	Upper feed connecting link
8	846307006	Connecting link
9	000066705	Setscrew 3x8
10	846349000	Upper feed adjusting link
11	820144003	Pin
12	000111201	Hexagonal socket screw 4x4
13	846350004	Upper feed adjusting arm (1)
14	000111304	Hexagonal socket screw 5x5
15	863111004	Upper feed upper shaft rear arm
16	822070003	Felt (1)
17	822112008	Felt holder (1)
18	866609003	Upper feed lower shaft (unit)
19	866018009	Upper feed lower shaft
20	846306005	Upper feed lower shaft rear arm
21	000061102	Nut 4-1-7
22	820166001	Lower shaft ring
23	846303002	Upper feed lower shaft bushing
24	000038502	Washer
25	000002806	Snap ring E-6
26	846348009	Rear arm feed lifting roller
27	863638105	Thread cutter (unit)
28	000081005	Setscrew 4x8
29	866606000	Needle plate sensor (unit)
30	866010001	Needle plate sensor set plate
31	866011002	Switch set plate
32	000101404	Setscrew 4x6
33	859524403	Switch (unit)
34	755096004	Setscrew
35	866603007	Knee lifter lever (1) (unit)
36	846167105	Knee lifter lever (1)
37	000178505	Hexagonal socket screw 5x25
38	000061412	Nut 5-3-8
39	000111706	Hexagonal socket screw 5x8
40	866005003	Knee lifter shaft
41	000002208	Snap ring E-9
42	846297002	Knee lifter slip guard
43	866006004	Knee lifter lever (2)
44	767059002	Lever shaft
45	846339007	Lever shaft spring
46	000001609	Snap ring E-5
47	858623101	Feed connecting link (unit)
48	863107007	Feed connecting link
49	502258006	Connecting pin
50	000002507	Snap ring E-4
51	846304106	Upper feed lower shaft front arm
52	502258202	Connecting pin
53	784071003	Looper shaft bushing
54	858644201	Upper feed adjusting arm 2 (unit)
55	863109102	Upper feed adjusting arm 2

PARTS LIST

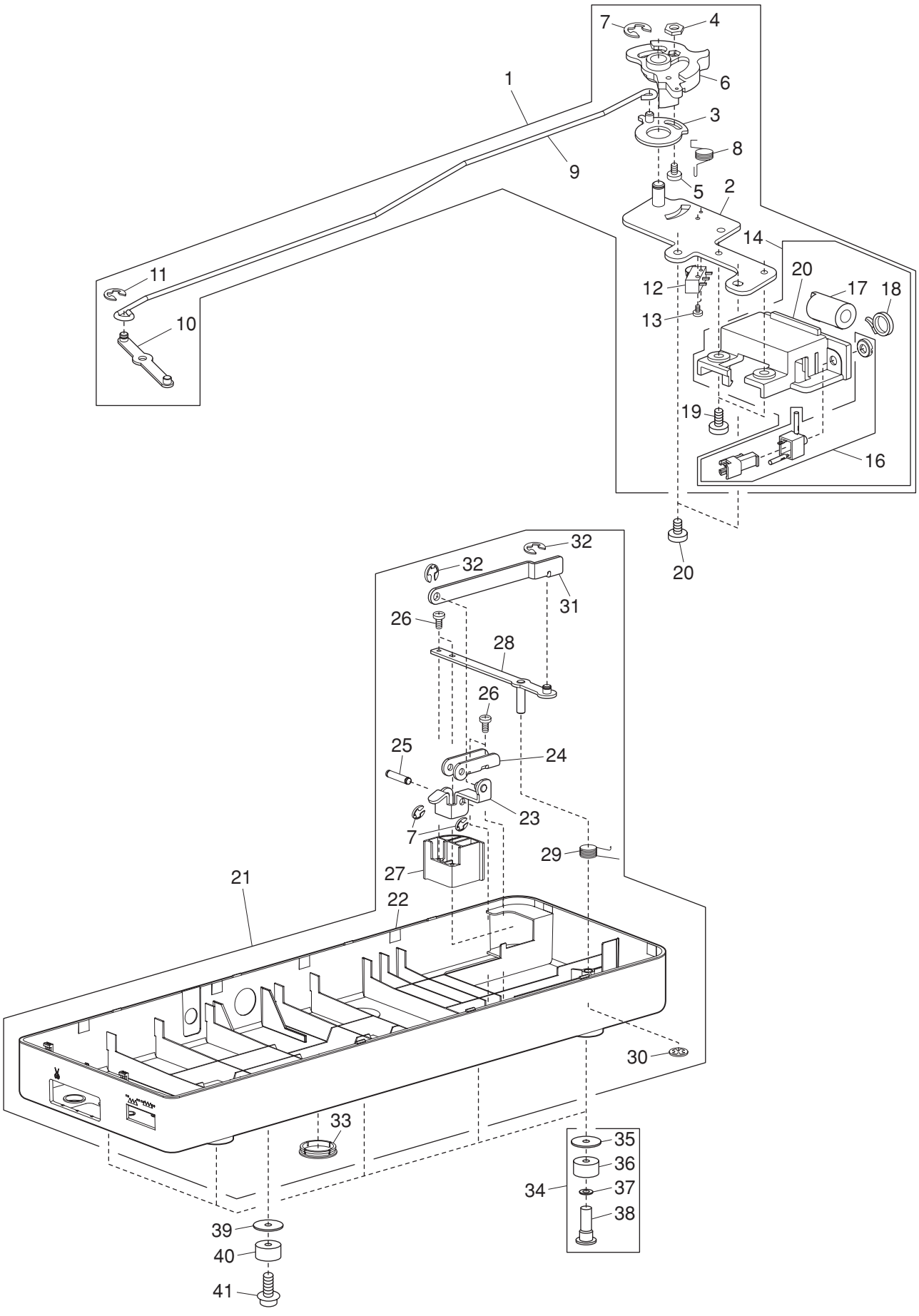
7
4
1
6
3
8
9
5
2
14
11
20
12
17
18
13
10
19
16
20
32
32
31
26
28
26
25
24
23
7
29
27
21
22
30
33
35
36
34
37
38
39
40
41

PARTS LIST

KEY NO.	PARTS NO.	DESCRIPTION
1	866618005	Feed dog drop lever (unit) (U.S.A.) (Canada)
	866618108	Feed dog drop lever (unit) (Australia) (Continental Europe) (Russia)
2	866037004	Feed dog drop lever
3	858142008	Feed dog drop lever connecting plate
4	000061803	Nut 3-3-5.5
5	000066705	Setscrew 3x8
6	858143009	Feed dog drop lever
7	000002507	Snap ring E-4
8	823119008	Spring
9	866038005	Rod 1
10	858139002	Drop connecting plate
11	000002105	Snap ring E-3
12	846513041	Micro switch (unit)
13	000102900	Setscrew 2x8
14	863622209	Printed circuit board B case (unit) (U.S.A.) (Canada)
	863622302	Printed circuit board B case (unit) (Australia) (Continental Europe) (Russia)
15	861090022	Printed circuit board B case
16	863517200	Jack cord (unit) (U.S.A.) (Canada)
	863517314	Jack cord (unit) (Australia) (Continental Europe) (Russia)
17	863504008	Ferrite core (Australia) (Continental Europe) (Russia)
18	000053101	Cord binder (Australia) (Continental Europe) (Russia)
19	000103509	Setscrew 4x10
20	000081005	Setscrew 4x8
21	866624004	Base (unit)
22	866062008	Base
23	866063009	Needle plate exchange driving arm
24	866064000	Driving arm set plate
25	767253101	Pin
26	000161206	Setscrew 3x10 (B)
27	866067003	Needle plate exchange button
28	866065001	Needle plate exchange lever
29	866066002	Spring
30	000013800	Snap ring CS-6
31	866086008	Needle plate exchange rod
32	000001609	Snap ring E-5
33	626045407	Cap
34	866630003	Rubber foot (unit)
35	866070009	Rubber foot washer
36	797363016	Rubber foot
37	000070300	Washer 5
38	784169009	Rubber foot screw
39	000071600	Washer 10
40	605074008	Rubber foot
41	000197407	Setscrew TP 4x12

PARTS LIST

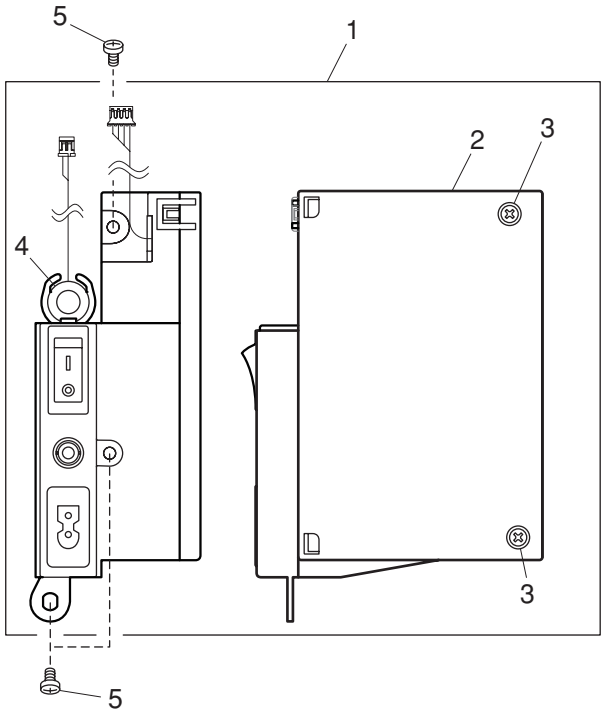
5
1
2
3
4
3
5

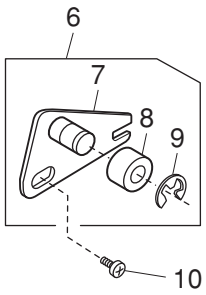
6
7
8
9
10

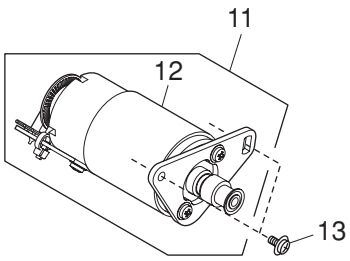
11
12
13

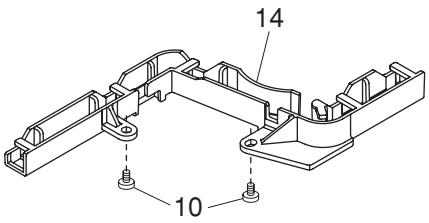
14
10

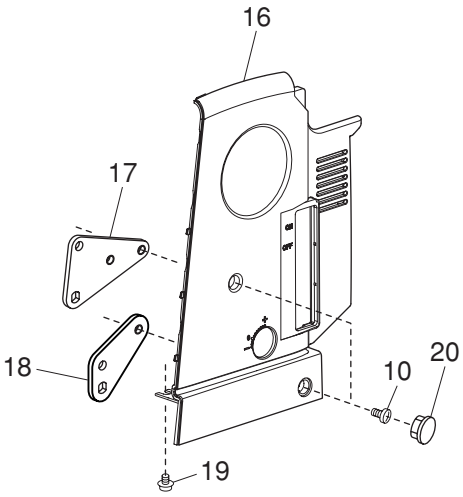
16
17
18
10
20
19

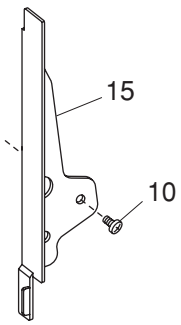
15
10

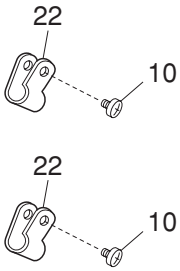
22
10
22
10

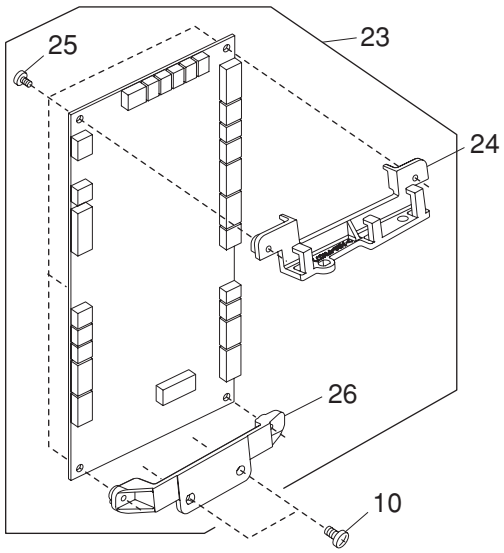
25
23
24
26
10

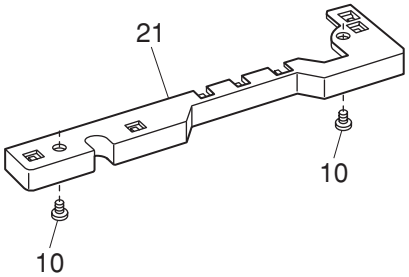
21
10
10

PARTS LIST

KEY NO.	PARTS NO.	DESCRIPTION
1	866619109	Switching power supply (unit) (U.S.A.) (Canada)
	866619006	Switching power supply (unit) (Australia) (Continental Europe) (Russua)
2	866039006	Switching power supply case
3	000119704	Setscrew 3x14 (B)
4	808108007	Ferrite core (Australia) (Continental Europe) (Russia)
5	000103509	Setscrew 4x10
6	860608004	Idler (unit)
7	860021007	Idler base
8	625217100	Idler
9	000002806	Snap ring E-6
10	000081005	Setscrew 4x8
11	866617004	DC motor (unit)
12	866504007	DC motor
13	000115607	Setscrew TP 4x8
14	866045005	Cord guide 1
15	866047007	Cord guide 2
16	866072001	Belt cover
17	866046006	Belt cover set plate 1
18	866071000	Belt cover set plate 2
19	000115205	Setscrew TP 4x6
20	745033002	Cap
21	861077001	Cord guide 2 (free arm)
22	000188209	Nylon clip
23	866621001	Printed circuit board A (unit)
24	866043003	A board set plate 1
25	000120203	Setscrew 3x8 (B)
26	866044004	A board set plate 2

PARTS LIST

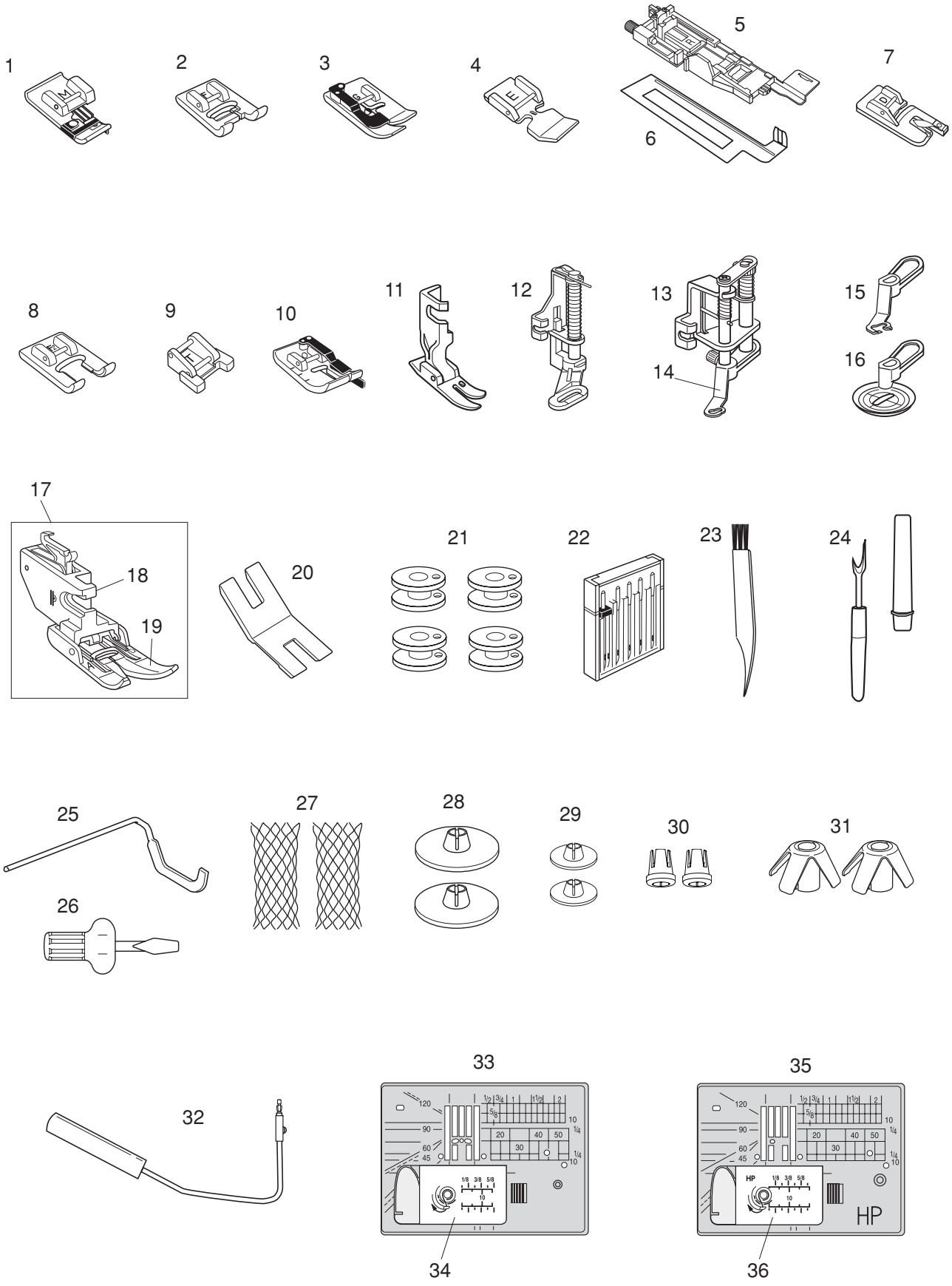
1
2
3
4
5
6
7
8
9
10
11
12
13
14
15
16
17
18
19
20
21
22
23
24
25
26
27
28
29
30
31
32
33
34
35
36
HP

PARTS LIST

KEY NO.	PARTS NO.	DESCRIPTION
1	859810007	Overedge foot M
2	859806011	Satin stitch foot F
3	859807001	Blind hemming foot G
4	859805009	Zipper foot E
5	862822013	Automatic buttonhole foot R
6	859832016	Stabilizer plate
7	859804008	Rolled hem foot D
8	859813000	Open toe satin stitch foot F2
9	859811008	Button sewing foot T
10	859814012	1/4″ seam foot O
11	865803006	Professional grade foot HP
12	859839002	Darning foot PD-H
13	858820018	Convertible free motion quilting foot QB-S
14	858820111	Close-toe foot
15	858821019	Open-toe foot
16	202002521	Clear view foot
17	859819017	Dual feed foot AD (unit)
18	859817015	Dual feed foot holder
19	859819109	Dual feed foot AD (twin)
20	832820007	Button shank plate
21	102261103	Bobbin
22	859856005	Needle set
23	802424004	Lint brush
24	647808009	Seam ripper (Buttonhole opener)
25	755802001	Quilting guide bar
26	820832005	Screwdriver
27	624806006	Net
28	822020503	Spool holder (large)
29	822019509	Spool holder (small)
30	862408008	Spool holder (special)
31	770850001	Spool rest
32	846417011	Knee lifter
33	862817107	Straight stitch needle plate
34	809136100	Hook cover (Straight stitch needle plate)
35	865805019	Professional grade needle plate
36	809136A01	Hook cover (Professional grade needle plate)

PARTS LIST

1

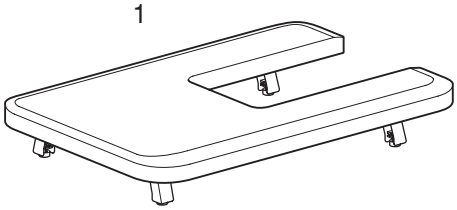

2

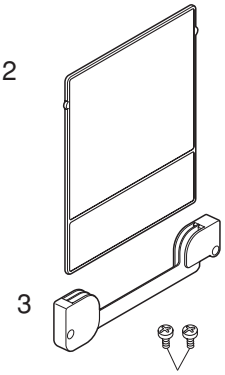

3

4

5

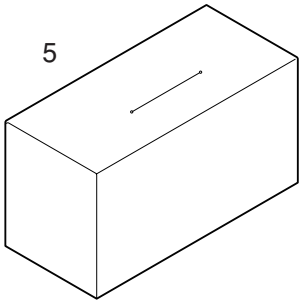

6

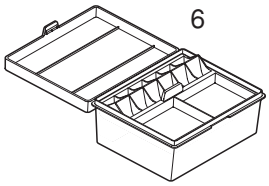

7

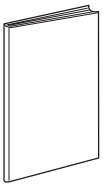

8

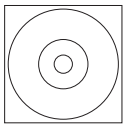

9

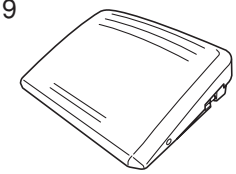

10 (U.S.A.) (Canada)

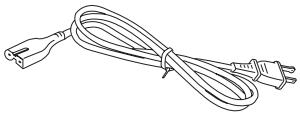

10 (Australia)

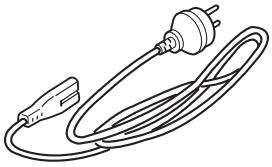

10 (Continental Europe) (Russia)

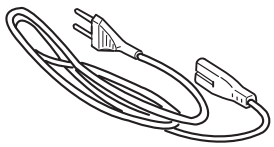

PARTS LIST

KEY NO.	PARTS NO.	DESCRIPTION
1	846401001	Extension table
2	866629102	Stitch reference chart
3	846285007	Stitch chart bracket
4	000163600	Setscrew 4x18
5	767805A01	Dust cover (U.S.A.) (Canada) (Australia) (Continental Europe)
	767805001	Dust cover (Russia)
6	866801018	Accessory box
7	866800202	Instruction book (English)
	866800213	Instruction book (French)
	866800224	Instruction book (German)
8	866805001	Instructional DVD
9	043170108	Foot control
10	856519004	Power cable (U.S.A.) (Canada)
	830314018	Power cable (Australia)
	830335004	Power cable (Continental Europe) (Russia)